BY APPOINTMENT
TO HM THE QUEEN
MANUFACTURERS OF
LAND ROVER VEHICLES
LAND ROVER, WARWICK

BY APPOINTMENT
TO HRH THE DUKE OF EDINBURGH
MANUFACTURERS OF
LAND ROVER VEHICLES
LAND ROVER, WARWICK

BY APPOINTMENT
TO HM QUEEN ELIZABETH THE QUEEN MOTHER
MANUFACTURERS OF
LAND ROVER VEHICLES
LAND ROVER, WARWICK

BY APPOINTMENT
TO HRH THE PRINCE OF WALES
MANUFACTURERS OF
LAND ROVER VEHICLES
LAND ROVER, WARWICK

LAND ROVER

RANGE ROVER

OWNER'S HANDBOOK

Publication Part No. LRL0649NAS - 2nd Edition

© Land Rover 2003

All rights reserved. No part of this publication may be reproduced, stored in a retrieval system or transmitted in any form, electronic, mechanical, recording or other means without prior written permission from Land Rover.

As part of Land Rover environmental policy, this publication is printed on paper made from chlorine free pulp.

Introduction

This handbook, together with the Passport to Service book, provides information you will need to derive maximum pleasure from owning and driving your new vehicle.

For your convenience, the handbook is divided into sections, each dealing with a particular aspect of driving or caring for the vehicle. These are listed on the contents page and you will find it worthwhile to take a little time to read each one, and get to know your Range Rover as soon as you possibly can. The more you understand before you drive, the greater the satisfaction once you are seated behind the steering wheel.

* An asterisk appearing within the text identifies features or items of equipment that are either optional, or are only fitted to some vehicles in the model range.

IMPORTANT

The specification of each vehicle will vary according to territorial requirements and also from model to model within the vehicle range. Some of the information published in this handbook, therefore, may not apply to your particular vehicle.

Land Rover operates a policy of constant product improvement and therefore reserves the right to change specifications without notice at any time. Whilst every effort is made to ensure complete accuracy of the information in this handbook, no liabilities for inaccuracies or the consequences thereof can be accepted by the manufacturer or the retailer, except in respect of personal injury caused by the negligence of the manufacturer or the retailer.

Contents

Quick Overview

Locking and Unlocking 5
Facia Controls 6
Warning Lights 7
Main Light Switch 8
Wipers and Washers 8
Comfort Air Conditioning 10
Trip Computer 12
Audio System Controls 13
Audio and Navigation System 15

Gas Station Information

Fuel Filler 16
Opening the Hood 16
Engine Oil Top Up 16
Cooling System Top Up 16
Tire Pressures 17

Before You Drive

Reporting Safety Defects 21
Auto Safety Hotline 21
California Proposition 65 21
Passport to Service 22
Warnings in This Handbook 22
Symbols Used 22
Vehicle Warning Labels 22
Airbag Warning Labels 23
Engine Compartment Labels 24
Anti-Theft Precautions 25
In An Emergency 25

Controls & Instruments

Facia Controls 29
Locks & Alarm 32
Seats 43
Seat Belts 53
Child Restraints 57
Airbag SRS 62
Steering Column 70
Door Mirrors 71
Instruments 73
Trip Computer 75
Message Centers 76
Warning Lights 82
Audible Warnings 86
Lights & Indicators 87
Wipers & Washers 90
Horn 94
Electric Windows 95
Sunroof 97
Heating & Ventilation 99
Interior Equipment 109
Loadspace Cover 122
In-Car Entertainment 125
Land Rover HomeLink® 126

Contents

Driving & Operating

Starting & Driving 131
Catalytic Converter 136
Fuel Filling 138
Park Distance Control 142
Automatic Transmission 144
Transfer Gearbox 150
Cruise Control 152
Brakes 154
Dynamic Stability & Traction Control . . .158
Hill Descent Control 160
Electronic Air Suspension 162
Towing 166
Load Carrying 170
Bi-Xenon Headlights 171

Off-road Driving

Off-road Driving 175
Driving Techniques 180

On-Road Driving

On-Road Driving 189

Owner Maintenance

Maintenance 195
Hood Opening 198
Engine Compartment 199
Engine Oil 200
Air Cleaner 204
Spark Plugs 205
Cooling System 208
Brakes 210
Power Steering 211
Washers 212
Wiper Blades 214
Battery 215
Tires 217
Cleaning & Vehicle Care 223
Identification Numbers 227
Parts & Accessories 228

Emergency Information

Tailgate Emergency Release 233
Wheel Changing 234
Emergency Starting 241
Towing the Vehicle 246
Fuses 249
Bulb Replacement 255

Technical Data

Lubricants & Fluids 271
Capacities 272
V8 Engine 273
Electrical System 274
Steering 275
Wheels & Tires 276
Vehicle Weights 279
Towing Weights 280
Dimensions 281

Index

Index 283

USING THE REMOTE HANDSET

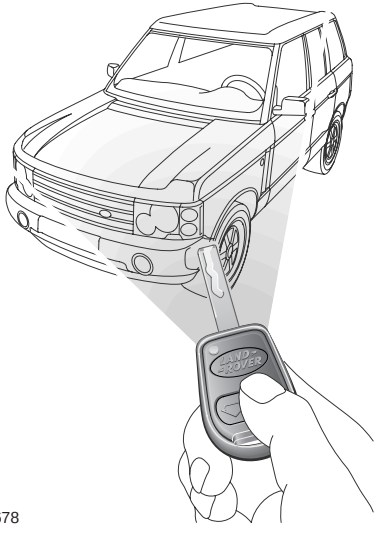

H4678

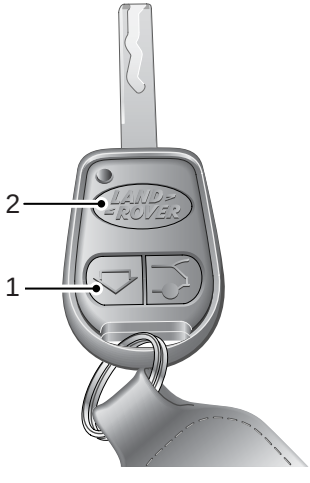

H5302

Unlocking

Your vehicle may be configured for Single point entry. This personal security feature unlocks only the driver's door and disarms the alarm when the handset unlock button (1) is pressed once.
To unlock all the remaining doors, press the handset button a second time.

If the 'Lazy' unlock feature is enabled, a continuous press of the unlock button (1) will also lower all windows, followed by opening of the sunroof.
Release the button to stop the sequence.

Your Land Rover retailer can disable Single point entry so that a single press of the handset button will open all doors and disable the alarm. See *'Single point entry', page 35*.

The 'Lazy' locking/unlocking feature can also be disabled/enabled by your Land Rover retailer. See *'Lazy locking/unlocking*', page 38*.

Locking

Press the lock button (2) once to lock all doors, arm the alarm system and activate the tilt sensor.
If interior space protection or the tilt sensor are not required, press the lock button twice.

If the 'Lazy' locking feature is enabled, all windows and the sunroof can be closed simultaneously with a press and hold of the lock button.
See *'Handset buttons', page 33*.

When the locking sequence is completed, the direction indicator lights and the side repeater lights will flash once. Also the anti-theft alarm indicator light built into the rear view mirror, will start to flash at a slow rate.

FACIA CONTROLS

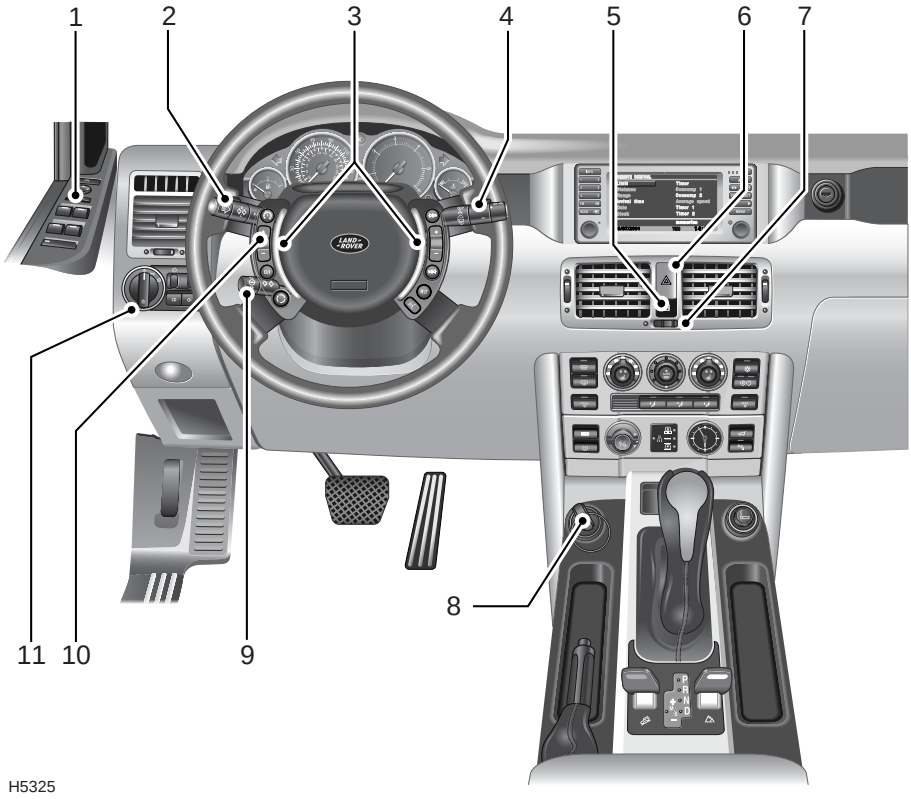

1. Access height control/electric windows and mirror switches
2. Dipped beam, main beam and direction indicator controls
3. Horn switches
4. Wiper and washer control
5. Door locking switch
6. Hazard warning light switch
7. Face level temperature control
8. Starter switch
9. Cruise control switches
10. Steering column adjuster
11. Main lighting switch

NOTE: *The precise specification and location of the controls may vary according to territorial requirements and from vehicle to vehicle. For more detailed information on fascia controls, see ‘FASCIA CONTROLS’, page 30.*

WARNING LIGHTS

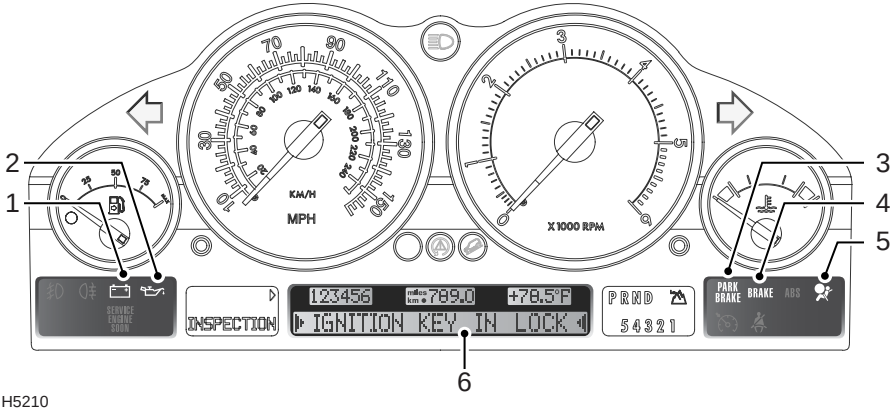

H5210

1. Battery charging (RED).
2. Low oil pressure (RED).
3. Handbrake system (RED).
4. Brake system (RED).
5. Airbag SRS (RED).
6. Main message centre.

If one of these red warning lights illuminates, a serious fault is indicated. Stop the vehicle and refer to the main section of this handbook.

NOTE: *This is a brief overview of the warning lights, for more information concerning warning light functionality, please refer to 'WARNING LIGHTS', page 80.*

MAIN LIGHTING SWITCH OPERATION

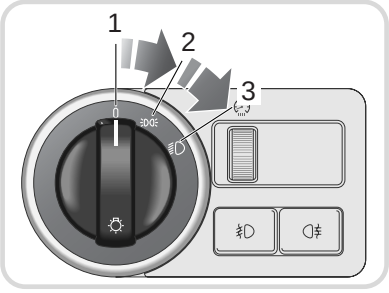

H5327

1. Lights off.
2. Side, tail and instrument panel lights on.
3. Headlights on.

NOTE: *For further information concerning operation of the lights, please refer to 'MAIN LIGHT SWITCH', page 84 and 'DIRECTION INDICATORS', page 85.*

WIPERS & WASHERS

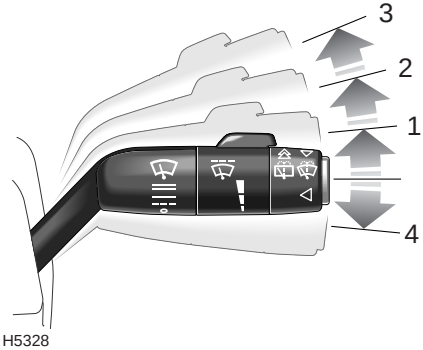

H5328

1. Intermittent wipe
2. Normal speed wipe.
3. Fast speed wipe.
4. Single wipe.

Intermittent variable delay

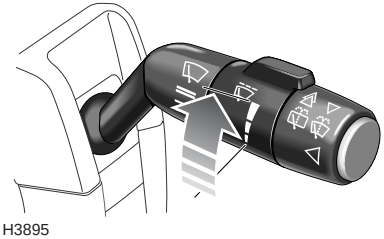

H3895

Rotate the switch to vary the delay between wipes.

Windshield washer control

H4056

Rear window wash/wipe

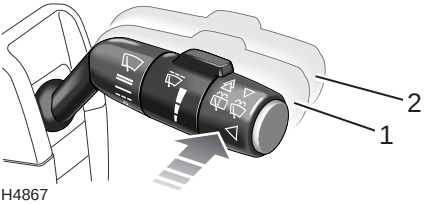

H4867

1. Rear wiper.
2. Rear wiper and washer.

Rear wiper delay

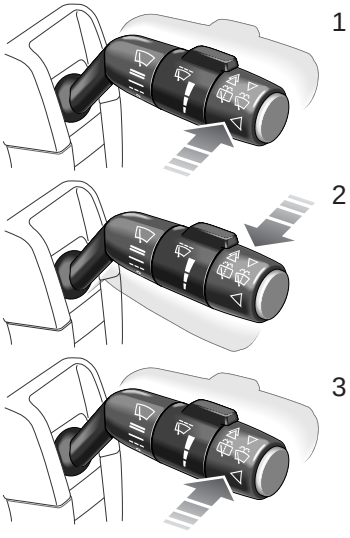

H5318

1. Push the lever forward.
2. Immediately pull the lever back and wait for the desired delay period.
3. Push the lever forwards.
   The delay period is now set.

NOTE: *For further information concerning operation of the wipers and washers, please refer to ‘WINDSCREEN WIPERS’, page 87.*

COMFORT AIR CONDITIONING

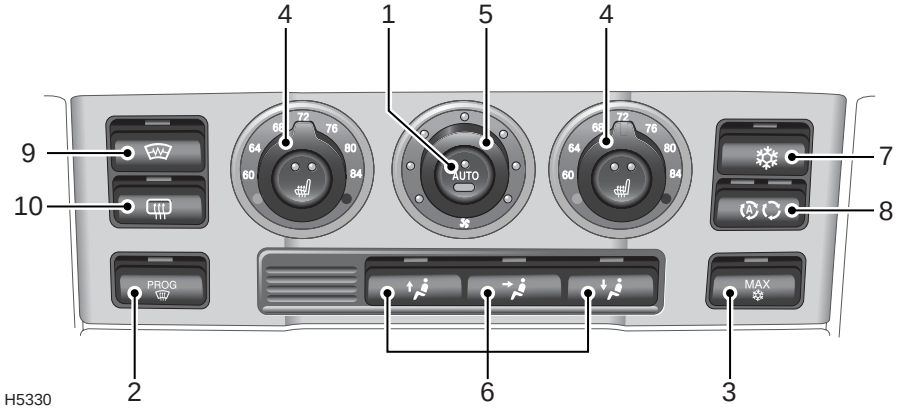

1. **Auto mode:** Press for fully automatic operation.
2. **Defrost mode:** Press to defrost or demist the windshield.
3. **Maximum air conditioning:** Press to quickly cool the interior of the vehicle.
4. **Temperature controls.**
5. **Blower control.**
6. **Air distribution control.**
7. **Air conditioning control.**
8. **Air recirculation control.**
9. **Heated front screen.**
10. **Heated rear screen.**

NOTE: *For more information concerning the operation of the climate control system, see 'COMFORT AIR CONDITIONING', page 99.*

ENGINE OFF HEATING

After driving, it's possible to warm the cabin by using the residual heat from within the engine. With the engine turned off, continued heating is available for up to 15 minutes.

Simply press the MAX button (3).

See *'4. Park heating', page 100*.

FACE LEVEL TEMPERATURE CONTROL

For cool or warm air to the face whatever the temperature setting, rotate the centre thumbwheel towards the blue dot for cool air or towards the red dot for warm air.
See *'Centre foot/face level vents', page 97*.

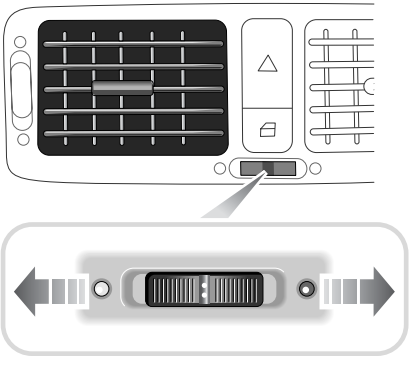

H4811

DOOR MIRROR DIP

The passenger door mirror will dip when reversing if the 'mirror select switch' is set to the driver's side. This provides the driver with a view of the curbside.
(Only available with 'memory' seats).

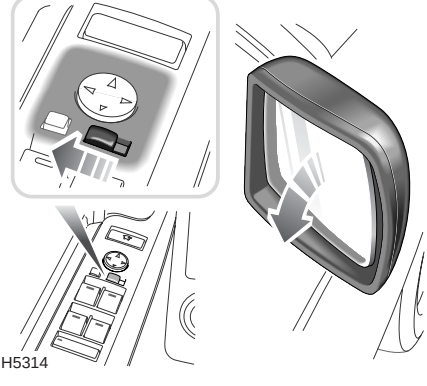

H5314

See *'Automatic mirror dipping*', page 69*.

ACCESS HEIGHT

For ease of entry and exit, access height can be requested prior to stopping the vehicle.
Press the access height switch.

The vehicle must be travelling at less than 80 kph (50 mph) and come to a stop within 65 seconds, otherwise the request is cancelled.

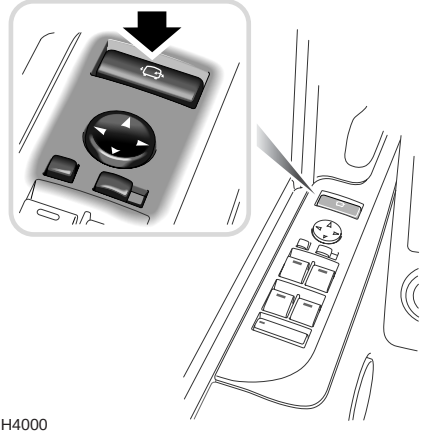

H4000

See *'ACCESS HEIGHT', page 162*.

TRIP COMPUTER

With the starter switch in position 'II' you can personalise the trip computer display.

Turn on your In-Car Entertainment unit and press the button on the end of the indicator stalk until the trip computer functions are shown on the display.

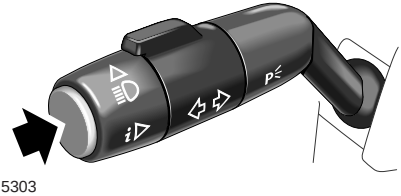

H5303

See *'TRIP COMPUTER - FUNCTION SELECTION', page 72*.

Monitor display

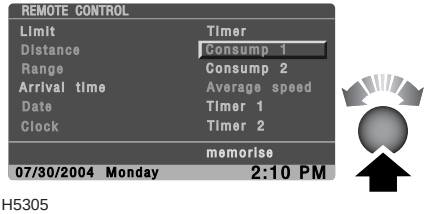

H5305

Turn the right hand rotary control to highlight your first choice from the list of trip computer functions.

Press the control to select it.

Make as many selections as you require.

When your list is complete, rotate the control to highlight 'memorise' and press to store.

Only these stored selections will be displayed in the instrument pack message centre.

Audio display

H5306

Use the lower row of buttons to select your choice of trip computer functions.

Press the clock button for further options.

To select 'clock' as one of the display options, press the clock button again.

With each selection, a number is displayed to indicate the order of display in the instrument pack message centre.

When your selection is complete, press the button under 'SET' to store.

NAVIGATION VOICE MUTE

With the navigation screen on, you can mute the navigation voice.

Using the right rotary control, select 'Instruction'.

Press and hold the control to mute.
A red line will appear through the speaker icon.

A subsequent press while 'Instruction' is highlighted will reactivate the navigation voice.

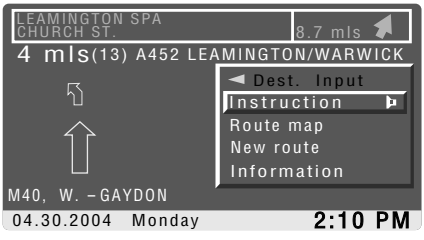

H5308

VOICE RECOGNITION HELP

To get help with voice recognition, press and hold the voice control key on the steering wheel until the message centre displays 'VOICE RECOGNITION'.

Now give the command 'HELP'.

This prompts the system to relate a selection of voice commands.

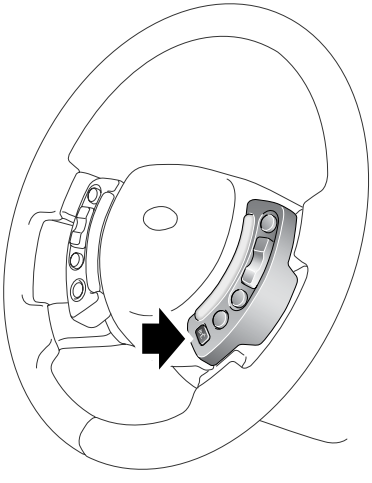

H5309

See *'Voice recognition - defined voice commands'* in your *'Audio'* book.

AUDIO SYSTEM CONTROLS

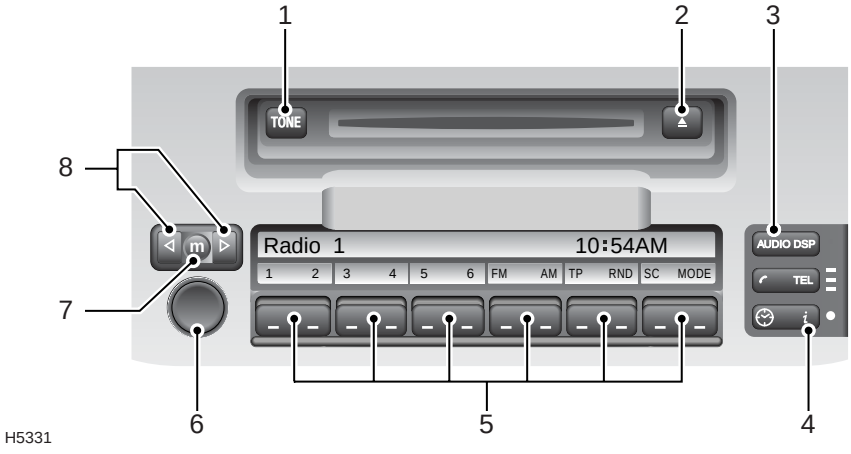

1. **TONE button**
2. **EJECT button**
3. **AUDIO button**
   Press to: Switch the radio on with the ignition switched off. Change the display for tone control with the radio switched on.
4. **Computer information**
5. **Function keys**
6. **On/Off/Volume - Rotary control**
   Press to turn on or turn off and rotate to adjust volume setting.
7. **Station search button**
8. **Station/Title/Search buttons**
   Press to search and select radio stations by frequency or by name. Fast forward/rewind tape. Music track search. (Cassette/MD/CD).

NOTE: *Please refer to your 'In-Car Entertainment' handbook for further details.*

NOTE: *Some music CD manufacturers are using data encryption to 'copy-protect' their recordings and prevent the production of pirate copies. These CDs differ from the internationally agreed CD audio standard, Redbook, a standard that serves as the operating basis for all CD players and changers.*

Copy-protected CDs may not play in your Audio unit or CD changer or may be played subject to various limitations, e.g., sound quality may be impaired.

If you do experience a problem, try the CD in other players before contacting the CD vendor.

AUDIO AND NAVIGATION SYSTEM

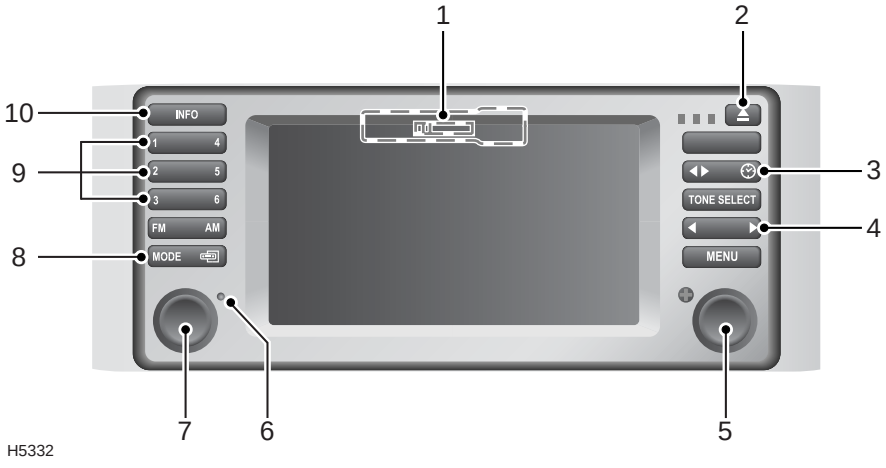

1. **Cassette slot** (access behind panel)
2. **Open/close display panel**
   Press to open the display panel; press again to close it.
3. **Cassette track select or auxiliary ventilation time control button**
   Press arrows to select cassette track. Press clock icon to select auxiliary ventilation off.
4. **Search button**
5. **Right rotary control**
   Turn to select a menu item, press to confirm selection.
6. **Radio light**
   Indicates that the radio has been turned on.
7. **Left rotary control**
   Press to switch radio on or off.
   Turn to adjust volume.
8. **MODE button**
   Each time the mode button is pressed, the mode switches between radio, cassette and CD.
9. **Station/CD buttons**
   Press to select a pre-set radio station, or select a CD in the autochanger.
10. **INFO button**
    Activates RBDS and TP functions.

NOTE: *Please refer to your 'Audio and Navigation' handbook for further details.*

Fuel filler

The fuel filler is located in the rear right-hand quarter panel. With vehicle fully unlocked, press the right side of the flap to open it.

Turn the cap counter-clockwise and allow any pressure inside the tank to escape before removing cap.

When replacing the cap, tighten it clockwise until you hear the fuel cap ratchet click once.

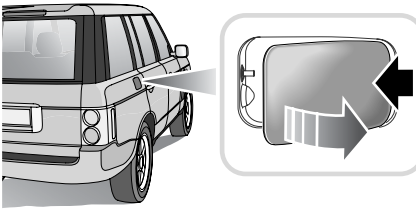

H4936

Fuel type	
Gasoline vehicles	Premium unleaded 90 - 92 RON pump octane.

NOTE: *For more detailed information, see.'FUEL FILLING', page 140*

Opening the hood

1. Pull hood release handle located by the left hand front door at foot height.
2. Lift hood safety catch lever and raise hood.

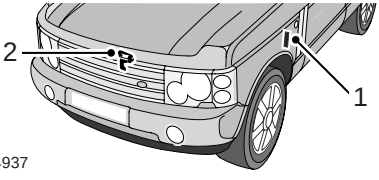

H4937

NOTE: *For more detailed information, see.'HOOD OPENING', page 198*

Engine oil top up	Use only fully synthetic oil to ACEA: A3 and B3 specification
Gasoline vehicles	0W/30, 0W/50, 5W/30 or 5W/40 oil meeting API service level SJ/CD, EC11 and having a viscosity band recommended for the temperature range of your locality.
Cooling system top up	
All vehicles to -36ºC	50% mix of fresh water and an AFC ethylene glycol based anti-freeze.

NOTE: *For more detailed information, see.'LUBRICANTS AND FLUIDS', page 271*

Tire pressures

Check pressures when the tires are cold. Air pressure naturally increases in warm tires (after the vehicle has been driven for a while). If you have to check warm tires, you should expect the pressures to have increased between 4 and 6 lbf/in^2 (30 to 40 kPa). In this circumstance, NEVER let air out of the tires in order to match the recommended pressures.

Loading condition		Pressure
Normal operating conditions	Front	34 lbf/in^2 (230 kPa)
	Rear	36 lbf/in^2 (250 kPa)
Vehicle loaded to maximum gross vehicle weight	Front	36 lbf/in^2 (250 kPa)
	Rear	44 lbf/in^2 (300 kPa)

NOTE: *For more detailed information, see.'WHEELS & TIRES', page 276*

Before You Drive 21

Before You Drive

REPORTING SAFETY DEFECTS 21
AUTO SAFETY HOTLINE 21
CALIFORNIA PROPOSITION 65 WARNING 21
BEFORE YOU DRIVE 21
PASSPORT TO SERVICE 22
WARNINGS IN THIS HANDBOOK. 22
SYMBOLS USED 22
WARNING LABELS ATTACHED TO THE VEHICLE 22
AIRBAG WARNING LABELS. 23
ENGINE COMPARTMENT LABELS 24
ANTI-THEFT PRECAUTIONS 25
IN AN EMERGENCY 25

REPORTING SAFETY DEFECTS

If you believe that your vehicle has a defect which could cause a crash, or could cause injury or death, you should immediately inform the National Highway Traffic Safety Administration (NHTSA) in addition to notifying Land Rover North America Inc.

If NHTSA receives similar complaints, it may open an investigation and if it finds that a safety defect exists in a group of vehicles, it may order a recall and remedy campaign.

However, NHTSA cannot become involved in individual problems between you, your retailer or Land Rover North America.

AUTO SAFETY HOTLINE

To contact NHTSA, you may either call the Auto Safety HOTLINE toll free at 1-800-424-9393 (or 202-366-0123 in the Washington, D.C. area) or write to: NHTSA, U.S. Department of Transportation, Washington, DC 20590. You can also obtain other information about motor vehicle safety from the HOTLINE.

CALIFORNIA PROPOSITION 65 WARNING

WARNING

Engine exhaust, some of its constituents and certain vehicle components contain or emit chemicals known to the State of California to cause cancer and birth defects or other reproductive harm. In addition, certain fluids contained in vehicles and certain products of component wear contain or emit chemicals known to the State of California to cause cancer, and birth defects or other reproductive harm.

WARNING

Battery posts, terminals and related accessories contain lead and lead compounds. Wash hands after handling.

BEFORE YOU DRIVE

WARNING

Your Range Rover has a higher ground clearance and hence, a higher centre of gravity than ordinary passenger cars, to enable the vehicle to perform in a wide variety of off-road applications. An advantage of the higher ground clearance is a better view of the road allowing you to anticipate problems.

The vehicle is not designed for cornering at the same speed as conventional passenger cars any more than a low slung sports car is designed to perform satisfactorily under off-road conditions. If at all possible, avoid sharp turns or abrupt manoeuvres. As with other vehicles of this type, failure to operate the Range Rover correctly may result in loss of control or vehicle rollover. For important safety information, be sure to read the 'On-Road' and 'Off-Road' driving guidelines given later in this handbook.

PASSPORT TO SERVICE

The Passport to Service book included in your literature pack contains important vehicle identification information, details of your entitlement under the terms of the Land Rover Warranty, as well as useful consumer advice.

Most important of all, however, is the section on maintenance. This outlines the servicing requirements for your vehicle and also includes the service record slips, which the retailer should sign and stamp to certify the routine services have been carried out.

WARNINGS IN THIS HANDBOOK

WARNING

Safety warnings are included in this handbook. These indicate a procedure which must be followed precisely in order to avoid the possibility of personal injury or serious damage to the vehicle.

SYMBOLS USED

The following symbols used within the handbook call your attention to specific types of information.

This recycling symbol identifies items that must be disposed of safely in order to prevent unnecessary damage to the environment.

This symbol identifies features that can be adjusted or disabled/enabled by a Land Rover retailer

WARNING LABELS ATTACHED TO THE VEHICLE

Warning labels attached to your vehicle bearing this symbol mean: DO NOT touch or adjust components until you have read the relevant instructions in the handbook.

Warning labels showing this symbol indicate that the ignition system utilizes very high voltages. DO NOT touch any ignition components while the starter switch is turned on!

AIRBAG WARNING LABELS

Always take careful note of warning information about the SRS/airbag attached to the sun visor (illustrated below) or other parts of the vehicle.

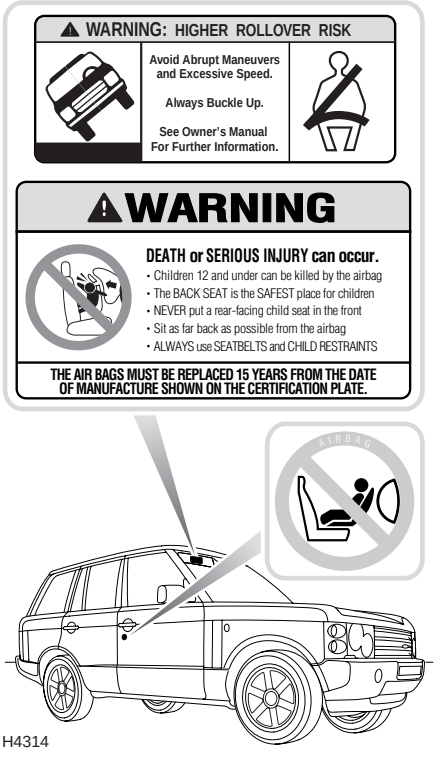

H4314

H4361

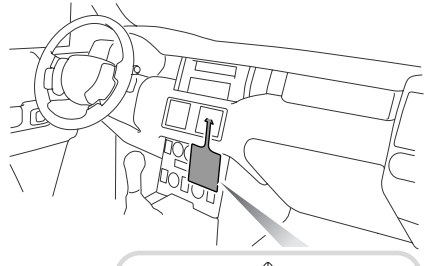

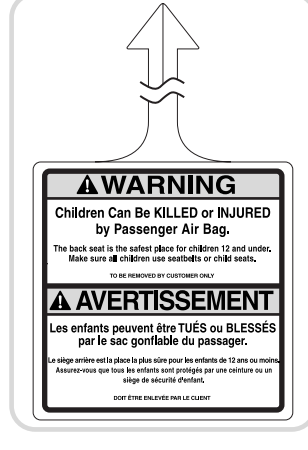

H5258

ENGINE COMPARTMENT LABELS

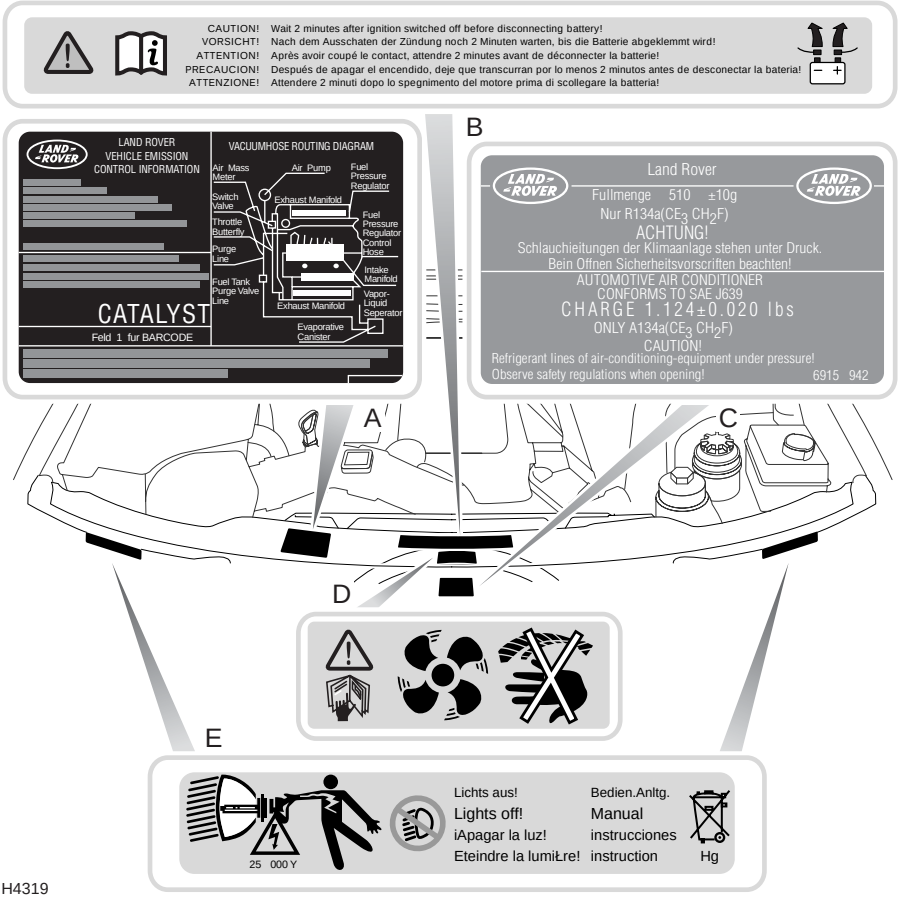

H4319

Various labels are fixed inside the engine compartment, the number, position and content of which may vary from model to model. The following illustration locates labels of specific importance and is included for guidance only.

A. Emission control label
B. Battery disconnection procedure label
C. Air conditioning label
D. Keep clear of rotating parts
E. Xenon headlight voltage and Mercury warning label (See *'Bi-xenon light units', page 255*).

ANTI-THEFT PRECAUTIONS

While it may be difficult to deter the 'professional' car thief, the majority of thefts are carried out by unskilled opportunists. Therefore, take vehicle security very seriously and ALWAYS adopt this simple 'four point' drill whenever you leave your vehicle - even for just a few minutes:

1. Fully close all the windows (and the sunroof).
2. Remove your valuable belongings (or hide them out of sight).
3. Remove the starter key.
4. Superlock the vehicle using the remote handset.

Thieves are attracted by 'vulnerable' vehicles. Even if you have followed the 'four point' drill, there is still much you can do to make your vehicle a less inviting target.

BE SAFE - NOT SORRY!

- Park where your vehicle can be easily seen by householders and passers-by.
- At night, park in well lit areas and avoid deserted or dimly-lit side streets.
- NEVER leave the keys in the vehicle.
- Do not keep important documents (or spare keys) in the vehicle - these are a real bonus for the thief.

IN AN EMERGENCY

IMPORTANT INFORMATION

Remember the breakdown safety code

If a breakdown occurs while travelling:

- Wherever possible, consistent with road safety and traffic conditions, the vehicle should be moved off the main thoroughfare, preferably onto the shoulder as far as possible. If a breakdown occurs on a motorway, pull well over to the inside of the hard shoulder.
- Switch on hazard lights.
- If possible, position a warning triangle or a flashing amber light at an appropriate distance from the vehicle to warn other traffic of the breakdown, (note the legal requirements of some areas).
- Consider evacuating passengers through the doors facing away from traffic, to a safe area away from the vehicle as a precaution in case your Range Rover is accidentally struck by another vehicle.

Controls & Instruments

Facia Controls

KEYS AND HANDSETS 29
FACIA CONTROLS 30

Locks & Alarm

ALARM SYSTEM 32
ENGINE IMMOBILISATION 38
REMOTE HANDSET BATTERY 39
CHILD-PROOF LOCKS 40
TAILGATE 40

Seats

SITTING CORRECTLY 43
POWER OPERATED FRONT SEATS 43
FOLDING ARMRESTS 47
DRIVER'S SEAT MEMORY FACILITY 49
FOLDING THE REAR SEATS 51
HEATED SEATS 52

Seat Belts

SEAT BELT SAFETY 53
PREGNANT WOMEN 53
WEARING SEAT BELTS CORRECTLY 54
SEAT BELT PRE-TENSIONERS 55
CARING FOR SEAT BELTS 56

Child Restraints

CHILD RESTRAINTS FOR SMALL CHILDREN AND BABIES 57
CHILD RESTRAINTS FOR LARGER CHILDREN . . 57
TETHER STRAP ANCHORAGES 59
'LATCH' TYPE CHILD RESTRAINTS 60

Airbag SRS

SRS/AIRBAG 62
HOW THE SRS/AIRBAG SYSTEM WORKS 64
CHILD SEATS 67
SERVICE INFORMATION 68

Steering Column

STEERING WHEEL ADJUSTMENT 70
STEERING WHEEL POSITION MEMORY 70

Door Mirrors

EXTERIOR MIRRORS 71

Instruments

INSTRUMENT PANEL 73

Trip Computer

TRIP COMPUTER - FUNCTION SELECTION 75

Message Centers

MAIN MESSAGE CENTER 76
WARNING & INFORMATION MESSAGES 77
SERVICE INTERVAL INDICATOR 81
GEAR SELECTOR DISPLAY. 81

Warning Lights

WARNING LIGHTS 82

Audible Warnings

AUDIBLE WARNINGS 86

Lights & Indicators

MAIN LIGHT SWITCH 87
DIRECTION INDICATORS 88
FOG LIGHTS 88
HAZARD WARNING LIGHTS 89

Wipers & Washers

OPERATING 90
WINDSHIELD WIPERS 90
WINDSHIELD WASHER 92
HEADLIGHT WASH/WIPE 92
REAR WINDOW WIPER AND WASHER 93

Horn

HORN 94

Electric Windows

ELECTRIC WINDOWS 95

Sunroof

SUNROOF OPERATION 97

Heating & Ventilation

VENTILATION 99
COMFORT AIR CONDITIONING. 102
USING YOUR HEATER 105
GENERAL NOTES 106
INDEPENDENT VENTILATION CONTROL 106
SEAT HEATERS. 107
REMOTE AIR RECIRCULATION. 108
HEATED STEERING WHEEL 108

Interior Equipment

INTERIOR COURTESY LIGHTS & MAP LIGHTS 109
LOW LEVEL NIGHT TIME ILLUMINATION 109
GLOVEBOX LIGHT 109
APPROACH LIGHTS 109
CLOCK 110
CIGAR LIGHTER 111
ASHTRAYS 111
AUXILIARY POWER SOCKETS 113
SUNGLASSES HOLDER 114
CUP HOLDERS 114
CUBBY BOX 117
SUN VISOR. 118
SUN VISOR VANITY MIRROR ILLUMINATION . 118
INTERIOR REAR-VIEW MIRROR 118
GLOVEBOX 119
LUGGAGE ANCHOR POINTS. 119
REAR LOADSPACE ACCESS HATCH. 120
REAR LOADSPACE STOWAGE AREAS 121

Loadspace Cover

LOADSPACE COVER 122

In-Car Entertainment

RADIO AERIAL 125
RADIO REMOTE CONTROLS. 125
IN-CAR ENTERTAINMENT 125

Land Rover HomeLink®

HOMELINK® TRANSMITTER 126

KEYS AND HANDSETS

You have been supplied with two remote handsets with integral keys which operate all locks and an emergency key, designed to fit into a wallet or purse. The emergency key can be used to open the doors only and has no remote functionality.

H5294

NOTE: *The emergency key should not be used for extended periods of time.*

The keys supplied with your vehicle are programmed to your security system - they CANNOT be re-programmed and the engine cannot be started without a key programmed to your vehicle. If a key is lost or broken, a replacement can only be obtained from a Land Rover retailer.

NOTE: *Land Rover* retailer*s do not stock spare keys, time has to be allowed for replacements to be programmed to your security system and then delivered to the retailer.*

If you lose a key, contact your Land Rover retailer; a key reported lost will be deactivated. If the key is recovered, your retailer can have it reactivated.

NOTE: *Keep the emergency key and spare handset key in a safe place - NOT IN THE VEHICLE!*

IMPORTANT INFORMATION

The handset complies with part 15 of the FCC rules. Operation is subject to the following conditions:

- This device may not cause harmful interference.
- This device must accept any interference received, including interference that may cause undesired operation. This applies to both alarm receivers and handset transmitters.

Any changes or modifications to the handset not expressly approved by the manufacturer or Land Rover North America could void the user's authority to operate the equipment.

Transmitter FCC ID: N5FVALTX3
Receiver FCC ID: N5VALTR3

FACIA CONTROLS

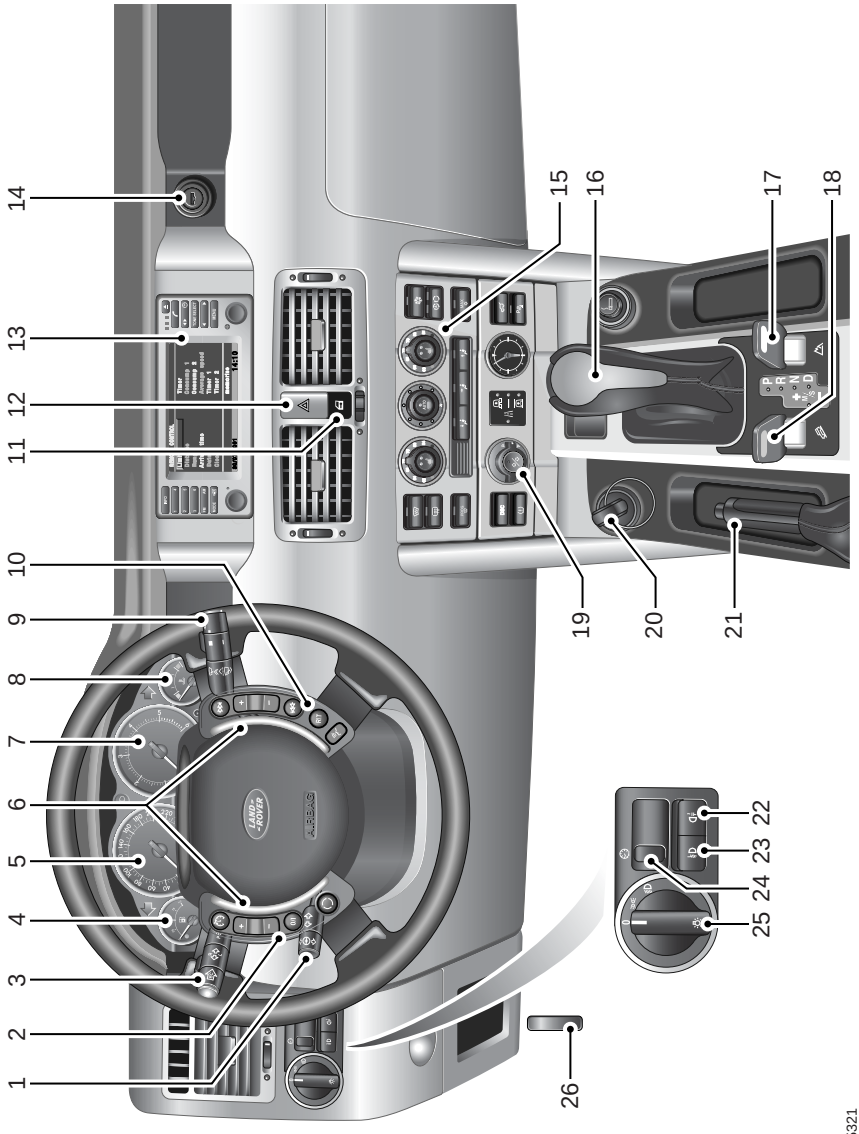

Facia Controls

Fascia Controls Key

1. Steering column adjuster
2. Cruise control switches
3. Lighting and direction indicator controls
4. Fuel gauge
5. Speedometer
6. Horn switches
7. Tachometer
8. Temperature gauge
9. Windscreen wiper/washer controls
10. Remote audio controls
11. Door locking switch
12. Hazard warning light switch
13. Audio/Navigation system controls
14. Glovebox lock
15. Heater/air conditioning controls
16. Main gear selector
17. Transfer gear switch
18. Hill descent control switch
19. Air suspension controls
20. Starter switch
21. Handbrake
22. Front fog lights
23. Rear fog guard lights
24. Instrument lights dimmer
25. Main light switch
26. Hood release lever

NOTE: *The precise specification and location of the controls may vary according to territorial requirements and from vehicle to vehicle.*

ALARM SYSTEM

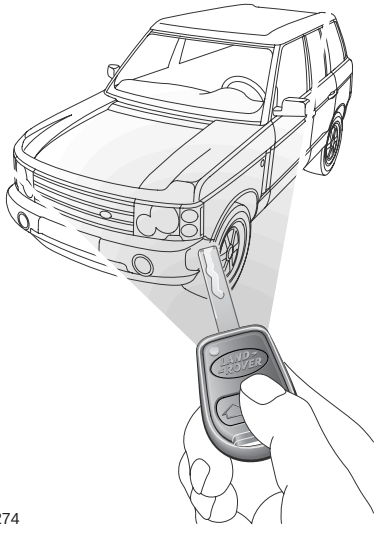

H4274

Your vehicle is fitted with a sophisticated electronic anti-theft alarm and engine immobilisation system. There are also a number of additional security features, some of which are selectable options and some are standard features of the vehicle. In order to ensure maximum security and operating convenience, you are strongly advised to gain a full understanding of the features and alternatives available, by thoroughly reading this section of the handbook.

IMPORTANT INFORMATION
FOR MAXIMUM SECURITY ALWAYS SUPERLOCK THE VEHICLE (except when passengers are to be left inside, in which case they must lock the vehicle using the interior locking switch). If it is necessary to leave a window or sunroof open, lock the vehicle by pressing the lock button (or turning the key) twice.

Using the remote handset

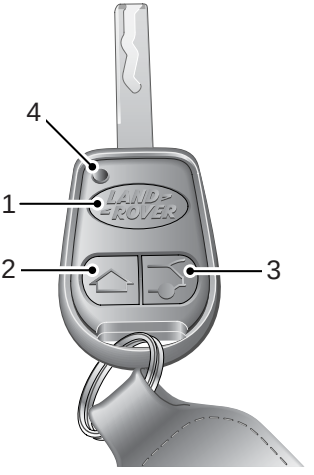

H4273

While it is not necessary to point the handset at the vehicle, the handset must be within range of the vehicle when a button is pressed. Note that the operating range may vary depending upon handset battery condition and may sometimes be limited by physical and geographical factors beyond your control. From a security point of view, it may not be wise to unlock unless you are in close proximity to the vehicle.

Handset buttons

The three buttons on the handset are used as follows:

1. Lock button: Press to superlock all doors and to activate the perimetric alarm and interior space protection and activate the tilt sensor (see *'Superlocking', page 34* and *'Tilt Sensor', page 34*).

   Press twice to superlock all doors and activate the perimetric alarm, but NOT activate interior space protection and tilt sensor.

   Press and hold to activate the convenience locking facility (see *'Convenience locking/unlocking*', page 38*).
2. Unlock button: Press once to disarm the alarm and unlock the driver's door. Press again to unlock the remaining doors (see *'Single point entry', page 35*).

   Press once to activate the memory seats, mirrors and steering column settings (see *'DRIVER'S SEAT MEMORY FACILITY*', page 49*). This will also activate the convenience unlocking facility (see *'Convenience locking/unlocking*', page 38*).
3. Tailgate button: Press to unlock the tailgate and to disarm the interior space protection. All other apertures remain locked and the perimetric protection on the other apertures remains armed.

   Press and hold to activate the panic alarm*.
4. Handset indicator light: Flashes once for each press of any handset button, as confirmation of operation.

Locking

Shut all doors, hood and tailgate, then press the lock (Land Rover) button once or turn the key in the driver's door lock towards the rear of the vehicle once:

- all doors are superlocked (see *'Superlocking', page 34*)
- engine immobilised
- perimetric alarm activated (protects the doors, hood and taildoor)
- interior space protection activated
- tilt sensor activated

The direction indicator lights flash once and the anti-theft alarm indicator light (below the rear-view mirror) starts to flash to confirm that the vehicle is secure.

Unlocking with the remote handset

- Press the unlock (arrow) button once to disarm the alarm and unlock the driver's door only (see *'Single point entry', page 35*).
- Press the unlock button twice to disarm the alarm and unlock ALL the doors.

In either case, the interior lights illuminate and the direction indicators flash twice.

Unlocking with the key

After a handset lock:

Turn the key in the driver's door lock towards the front of the vehicle to unlock the driver's door - the alarm will sound when the door is opened. Unlocking the door using the key will not disarm the alarm - press the unlock button on the handset, or turn the starter switch to position 'II', to disarm the alarm.

After a key lock:

Turn the key in the driver's door lock towards the front of the vehicle to unlock the driver's door and disarm the alarm. Turn the key a second time to unlock the other doors.

Superlocking

WARNING

For safety, NEVER use Superlocking if passengers are to remain inside the vehicle - in an emergency they would not be able to escape. Also, any movement from within the vehicle would activate the alarm, if interior space protection has been activated.

Superlocking is activated automatically whenever the vehicle is locked using either the handset or the key.

Superlocking immobilises the interior door handles, thereby preventing an intruder from gaining entry by smashing a window and reaching inside the vehicle to operate the door handles.

If superlocking is required, but NOT interior space protection, press the lock button twice within 10 seconds (or turn the key towards the rear of the vehicle twice within the same time period). Allow for a two-second delay before pressing the lock button a second time.

Tilt Sensor

Your vehicle is fitted with a tilt sensor which activates the alarm if the vehicle is tilted fore and aft, or side to side, after it has been superlocked.

The alarm will sound if theft is attempted by hoisting onto another vehicle or if a side is lifted to attempt wheel removal.

If you wish to have the doors locked but the tilt sensor disabled (e.g. when aboard a ferry or having the vehicle transported on a recovery truck) press the lock button twice within 10 seconds (or turn the key in the driver's door lock towards the rear of the vehicle twice within 10 seconds).

Partial arming

If the driver's door is not fully closed when the handset lock button is pressed, all closed doors will lock, but the driver's door will not. If the driver's door is subsequently closed, the locking procedure must be repeated to lock the driver's door.

If a passenger door or other aperture is not fully closed when the handset lock button is pressed, the 'partial arming' attributes of the security system will enable as much of the system to be armed as possible (all fully closed door, hood or tailgate apertures will be protected, but an open door will not!). As soon as the open aperture is closed, the system will automatically revert to an armed state, with interior space protection activating 30 seconds after all apertures are closed.

Anti-theft alarm indicator light

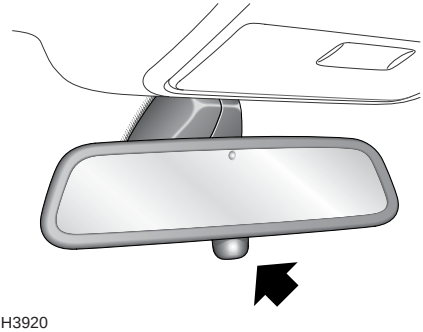

H3920

The light provides information about the status of the alarm system, as follows:

When the alarm is armed:
The light flashes at a slow frequency and continues to flash as an anti-theft deterrent until the alarm is disarmed.

If interior space protection is disabled when the alarm is armed (by a double operation of the lock button or key), the light will illuminate constantly for 1 second as confirmation.

When the alarm is partially armed *(mislock):*
The light flashes rapidly for 10 seconds, then flashes at a slower rate as an anti-theft deterrent until the alarm is disarmed.

If the alarm has been triggered:
When the alarm is triggered, the light flashes rapidly for 5 minutes, before returning to a slow frequency.

If the light flashes rapidly after the vehicle is unlocked, this indicates that the alarm has been triggered during the driver's absence. The light will flash rapidly for 10 seconds.

If the alarm sounds
If the alarm is triggered, the alarm will sound for 30 seconds and the hazard warning lights will flash for 5 minutes, before switching off and resetting itself to the same protection status that existed prior to the alarm being triggered.

To silence the alarm, press the unlock button on the remote handset.

Single point entry
This is a personal security feature, which enables the driver's door only to be unlocked, leaving the other doors in a locked state. It can be operated by the remote handset as follows:

- press the unlock button once to unlock the driver's door (or turn the key in the driver's door lock towards the front of the vehicle, if the vehicle was locked using the key).
- press the unlock button (or turn the key) a second time to unlock the remaining doors.

When the vehicle is unlocked using single point entry, if the interior locking button is then pressed, the driver's door will relock. A second press is required to unlock all the doors.

Single point entry can be disabled or enabled on all handset keys, or on individual handset keys, by a Land Rover retailer.

Interior locking switch

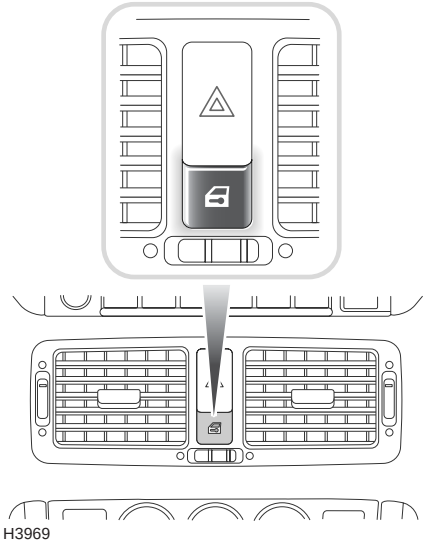

H3969

This is a personal security feature which allows the driver to lock (or unlock) all the doors from inside the vehicle (while driving or with the vehicle stationary). Press the switch to lock (the alarm will not be armed) or unlock.

NOTE: *If the locks have already been superlocked, the switch will not release the locks.*

Interior door handles and door sill locking buttons

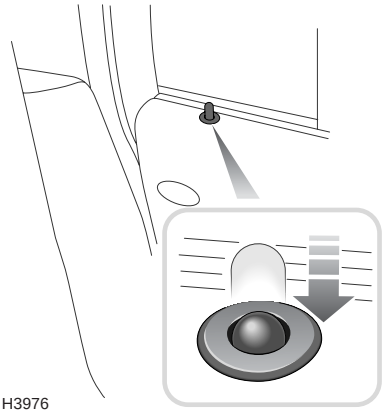

H3976

From inside the vehicle, each door can be individually locked by depressing the appropriate door sill button. However, doors cannot be unlocked by raising the sill button.

Use the door handles to unlock, as follows:

- First operation of the door handle unlocks the door.
- Second operation of the door handle opens the door.

When the interior locking switch is activated, all door locking buttons will be depressed automatically.

Interior space protection
Interior space protection is activated whenever the alarm is armed.

CAUTION: Never activate interior space protection if windows or sunroof are to be left open, or if passengers or animals are to be left inside the vehicle - any movement will activate the alarm.

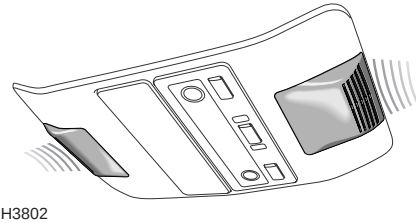

H3802

Interior space protection is designed to protect the interior of the vehicle from intrusion (entry by a thief through a smashed window, for example). A pair of sensors monitors the interior space and activate the alarm if air movement is detected in the passenger compartment.

NOTE: *Interior space protection cannot be activated if a door is open.*

Disabling interior space protection:
If there is a requirement to disable interior space protection (if a window or sunroof is to be left open, for example), press the lock button twice within 10 seconds. If locking with the key, turn the key in the driver's door lock towards the rear of the vehicle twice within 10 seconds.

Drive-away locking*
This security feature locks all the doors automatically when the vehicle speed exceeds 10 mph (16 km/h).

Note Drive-away locking is not selectable by the driver, and that operation of the door locks by any other means (interior locking switch on the facia panel, for example) will unlock the doors. Drive-away locking can be configured by your retailer to automatically relock the doors after they are unlocked, when the vehicle speed exceeds 10 mph (16 km/h).

Drive-away locking can be selected, deselected or reconfigured for individual handset keys, by a Land Rover retailer.

Automatic relock*
If the vehicle is unlocked using the remote, but no door or tailgate is opened after 2 minutes, the vehicle will relock (but not superlock), but the alarm will not be re-armed.

Automatic relock can be selected or deselected by a Land Rover retailer.

Panic alarm*
If the tailgate button on the remote handset (see *'Using the remote handset', page 32*) is pressed and held, the alarm will sound and the hazard warning lights will flash (market permitting). This feature is to draw attention to the vehicle and driver, to deter potential thieves/attackers.

The panic alarm facility can be selected or deselected by a Land Rover retailer.

Convenience locking/unlocking*

WARNING

Accidental closing of an electrically operated window or sunroof on fingers, hands or any vulnerable part of the body, can result in serious injury. Always observe the following precautions:

ENSURE that you have a clear view of all open apertures on the vehicle and that all apertures are unobstructed, before activating the convenience locking feature.

ENSURE children are kept clear whilst raising or lowering windows and opening or closing the sunroof.

ENSURE that all adult passengers are familiar with the controls and the potential dangers of electrically operated windows and sunroof.

'Convenience' locking enables you to use the key to close the windows and sunroof at the same time as you secure the vehicle.

'Convenience' unlocking enables you to use the handset or key to open the windows and sunroof, at the same time as you unlock and open the vehicle.

Convenience locking:

1. Ensure that all doors, hood and tailgate are properly closed.
2. Turn and the key in the driver's door lock towards the front of the vehicle, until all the windows and the sunroof are closed - the vehicle security system will be armed.

   NOTE: *Window and sunroof movement will stop if the key is released during this operation.*

Convenience unlocking:

1. Press and hold the unlock button on the remote handset (or turn and hold the key in the driver's door lock rearwards), the windows and then the sunroof will fully lower/open - the vehicle security system will be disarmed and the driver's door will unlock.
2. Release the button or key when the windows and sunroof are open as required.

Convenience locking/unlocking can be enabled or disabled by a Land Rover retailer.

ENGINE IMMOBILISATION

Engine immobilisation is an important aspect of the security system, it is designed to safeguard the vehicle from theft, should the driver forget to lock the doors and prevents the engine from being started unless the GENUINE handset key is inserted into the starter switch. Engine immobilisation is automatic whenever any of the following conditions occur.

- The vehicle is locked using handset or key.
- Three seconds after the starter switch has been turned off AND the driver's door opened.
- If the key is removed from the starter switch.

NOTE: *The engine will be re-mobilised automatically whenever the genuine handset key is inserted into the starter switch and turned to position 'I'.*

REMOTE HANDSET BATTERY

CAUTION: The handset contains delicate electronic circuits and must be protected from impact and water damage, high temperatures and humidity, direct sunlight and the effects of solvents, waxes and abrasive cleaners.

The battery should last for approximately three years dependent upon use. When the battery needs replacing it will be apparent from the following symptoms:

- 'KEY BATTERY LOW' will be displayed in the main message centre.
- A gradual deterioration in range and performance.

Always fit a Panasonic CR2016 replacement battery (available from a Land Rover retailer).

Battery replacement

1. With the handset face down, insert the blade of a small flat-bladed screwdriver into the slot at the rear of the handset and prise the screw cover upwards.
2. Remove the two screws and carefully remove the back of the handset.
3. Use a small flat-bladed screwdriver to prise the battery from its mounting (see illustration), taking care to avoid touching the circuit board or the metal battery contacts.
4. Fit the new battery, ensuring that correct polarity is maintained ('+' side facing up). Finger marks will adversely affect battery life; if possible, avoid touching the flat surfaces of the battery and wipe them clean before fitting.

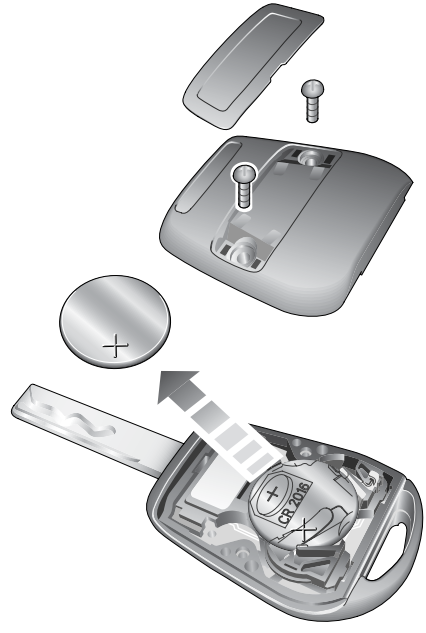

H3832

Refit the back of the handset, insert and tighten the screws and firmly press the screw cover back into position. The handset is now ready for use.

CHILD-PROOF LOCKS

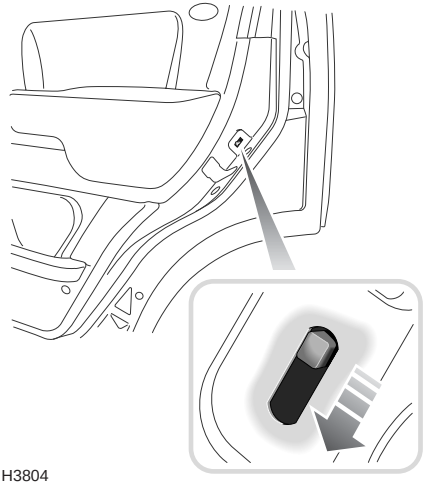

H3804

Move the locking levers on the rear doors down to engage the child locks.

With the child-proof locks engaged, the rear doors cannot be opened from inside the vehicle, thereby avoiding the risk of a door being opened accidentally while the vehicle is moving.

WARNING

TO AVOID POSSIBLE INJURY OR DEATH, NEVER LEAVE CHILDREN UNSUPERVISED IN THE VEHICLE.

TAILGATE

Opening the upper tailgate

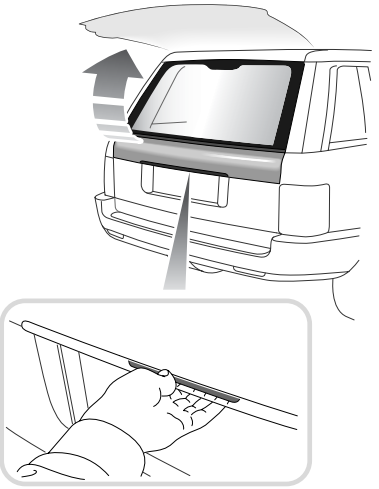

H3929

With all doors unlocked, press the switch on the bottom edge of the upper tailgate and lift to open.

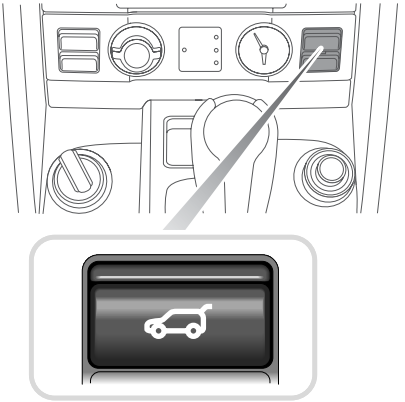

H4884

If single point entry has been used and only the driver's door is unlocked, press the tailgate release button (illustration above).

Opening the lower tailgate

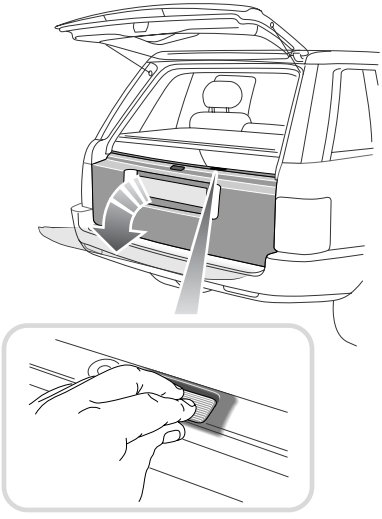

H3930

With the upper tailgate open, press the release switch on the top of the lower tailgate (see inset), then lower the tailgate.

Emergency manual operation

Upper tailgate:

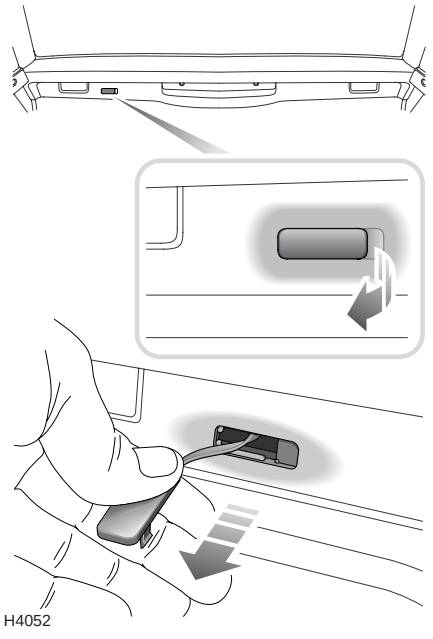

If the battery has been disconnected or has discharged, the tailgate can be opened manually as follows:

- Fold the rear loadspace cover (see *'Folding the loadspace cover from inside the vehicle', page 123*, for instructions).
- From the rear loadspace, lever out the plastic tab (see inset).
- Pull the tab to release the upper tailgate.
- Raise the upper tailgate.

Lower tailgate:

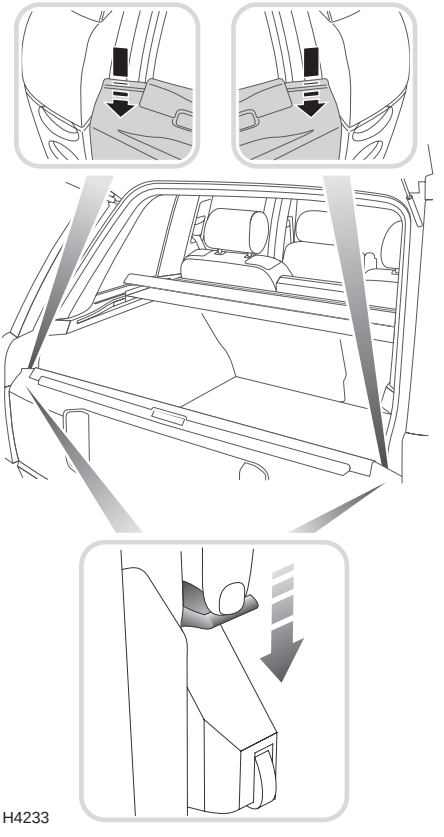

With the upper tailgate open, push down on the two hidden catches (see upper insets), either side of the tailgate. The catches can be operated either one at a time, or simultaneously.

SITTING CORRECTLY

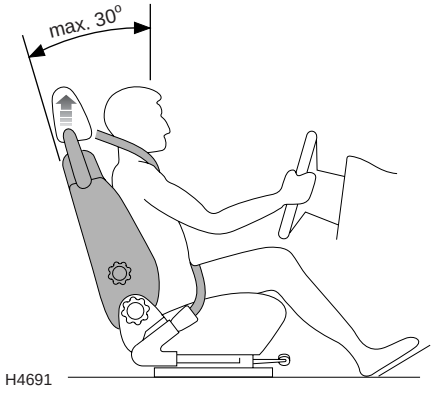

The seats, head restraints, seat belts and airbags all contribute to the protection of the occupants. Optimal use of these components will give you more protection. Therefore, observe the following points:

- Sit in the most upright position with the base of your spine as far back as possible and the backrest not reclined more than 30 degrees.
- Adjust the head restraints so that the top of the head restraint is level with the upper portion of the head.
- Do not move the front seat too close to the instrument panel. The driver should hold the steering wheel with slightly bent arms. The legs should also be slightly bent so that the pedals can be pressed to the floor.
- The seat belt should rest in the center of the shoulder. The lap part should fit tightly across the hips and not on the stomach.

POWER OPERATED FRONT SEATS

WARNING

To avoid the risk of loss of control and personal injury, DO NOT adjust the driver's seat while the vehicle is in motion.

The seat adjustment controls are situated on the outboard side of the seat plinth.

The driver and front passenger seats should be positioned as far rearward as practical. Ideally the seat should be positioned so that the steering wheel can be held with the arms slightly bent and the seat back in a nearly upright position.

Make sure your driving position is comfortable and enables you to maintain full control of the vehicle. A properly adjusted seat helps reduce the risk of injury from sitting too close to an inflating airbag.

Forward/backward adjustment

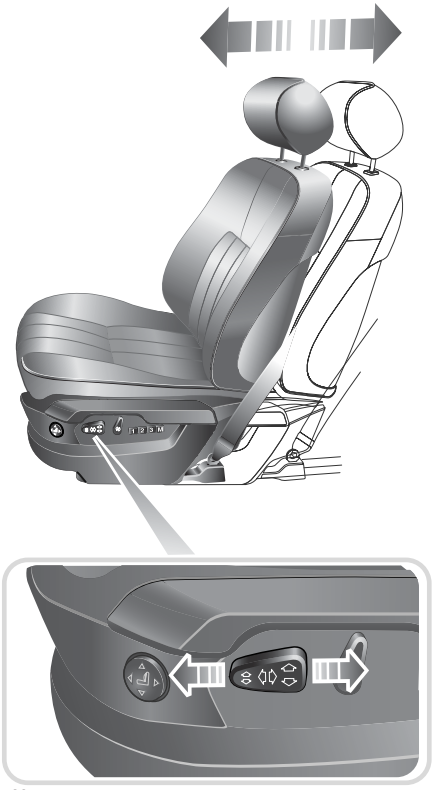

H3845

Push and hold the switch forwards or backwards to move the seat to the desired position.

Seat back adjustment

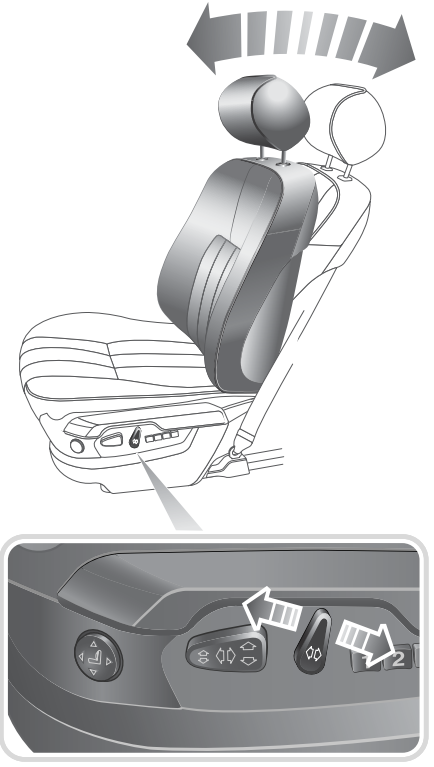

H3842

Twist the switch forward or backward until the desired seat back angle is achieved.

WARNING

DO NOT travel with the seat backs reclined steeply rearwards. Optimum benefit is obtained from the seat belt with the seat back set to an angle of not more than 30 degrees from the upright (vertical).

Failure to maintain the correct seat back angle will reduce the effectiveness of the seat belts and increase the risk of serious injury or death in a crash.

Seat cushion height adjustment (driver's seat only)

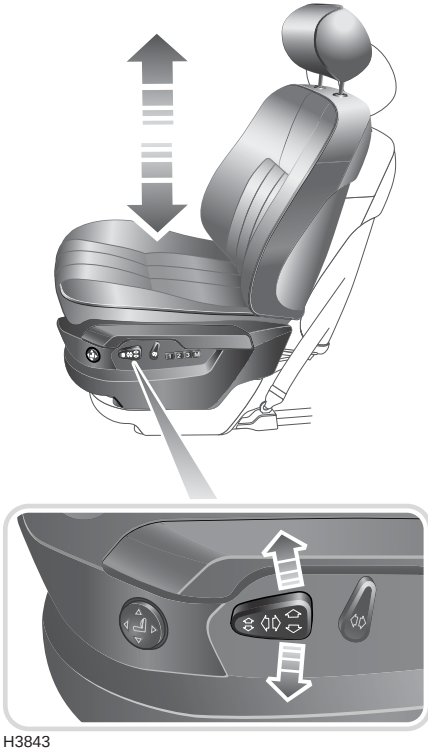

H3843

Push the switch up or down to raise or lower the cushion.

WARNING

An inflating airbag can cause facial abrasions and other injuries. The injurious effects of airbag inflation can be minimised by ensuring that the driver and passenger are seated correctly, with the seat moved back as far as is practical, and the seat belts worn correctly.

Seat cushion angle adjustment

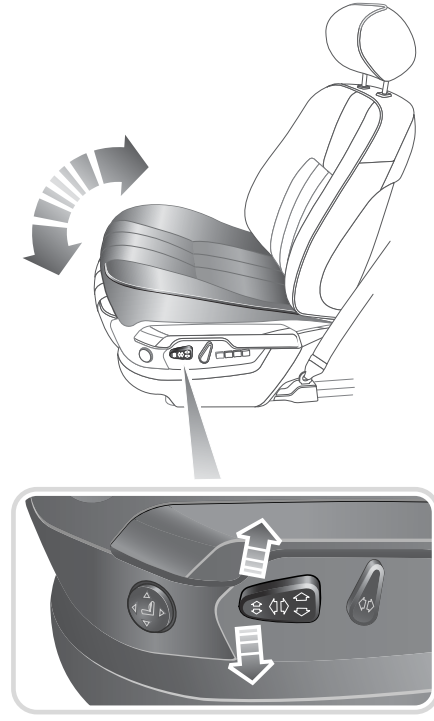

H3844

Twist the front of the switch to tilt the seat cushion to the desired position. Note that the front and rear of the switch work independently - the front tilting the front of the cushion, the rear of the switch adjusts the height of the seat cushion.

Lumbar support adjustment*

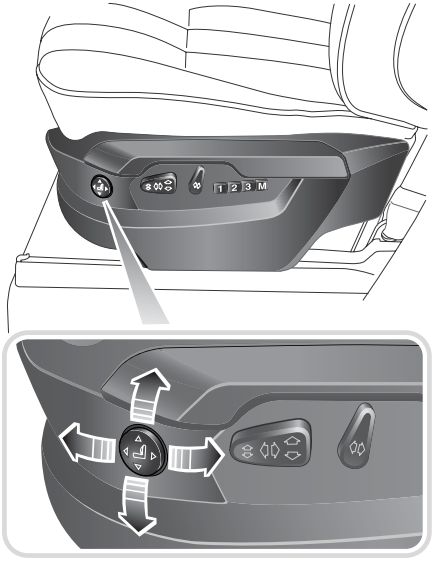

H3846

Press the right or left of the switch to increase or decrease support to the lumbar region of the back. Press the top or bottom of the switch to increase support at the top or bottom of the seat back.

Shoulder support adjustment*

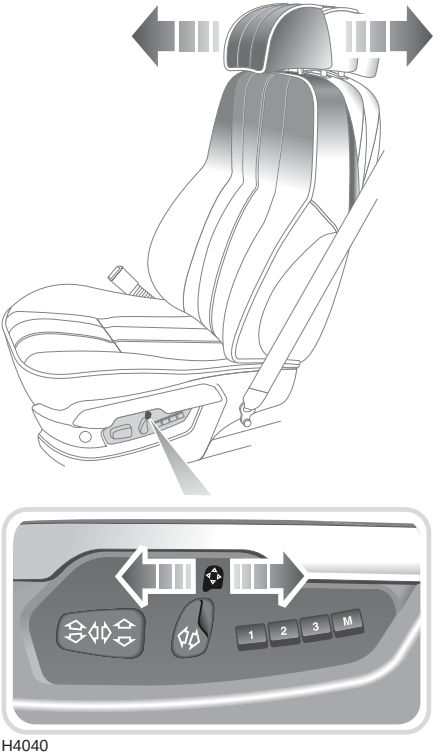

H4040

Push the control forward or rearward to increase or decrease shoulder support.

Head restraint adjustment*

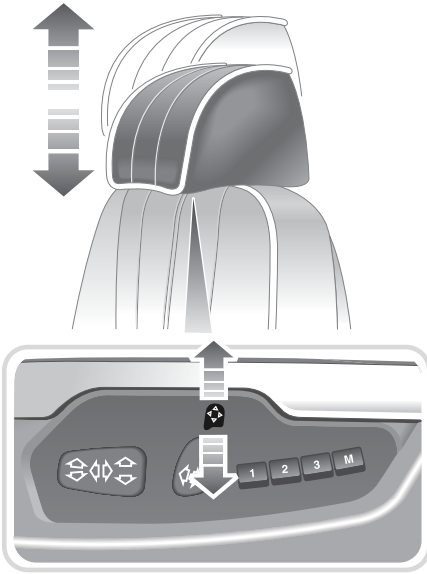

H4042

Push the switch up or down until the head restraint cushion is level with the back of the head.

WARNING

Head restraints are designed to support the back of the head (NOT THE NECK), and to restrain rearward movement of the head in the event of a collision. The restraint must be positioned level with the head to be effective.

DO NOT drive or carry passengers with the head restraints removed from occupied seats, or adjust the head restraints while the vehicle is in motion.

Failure to have the head restraint installed and properly positioned will increase the potential for serious injuries.

FOLDING ARMRESTS

Front

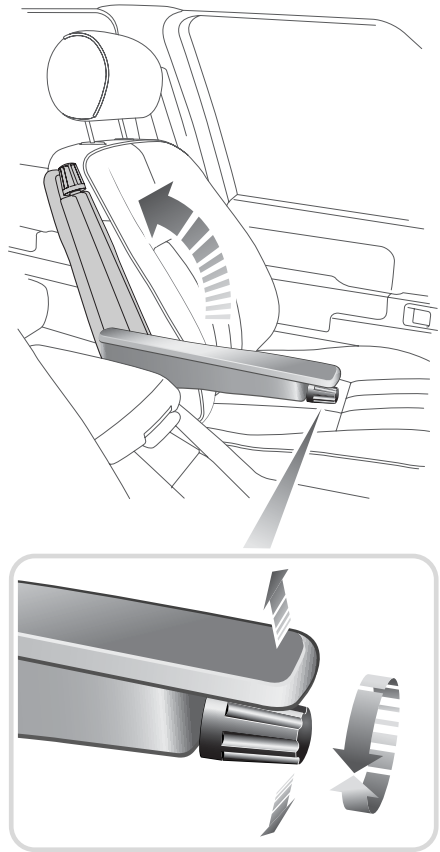

H3791

Some vehicles are fitted with adjustable front seat armrests, which can be either; stowed vertically in line with the seat backrest when not required, or folded horizontally to serve as an arm/elbow rest.

The set height/angle of each armrest can be adjusted by turning the knob set into the end of the armrest: clockwise to raise and anti-clockwise to lower (see inset).

Rear

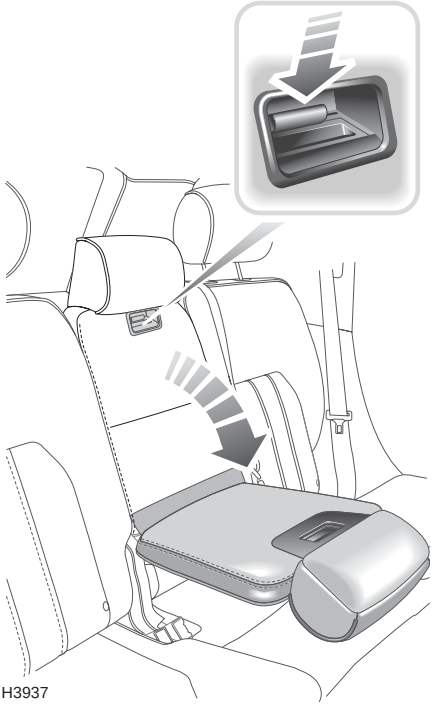

To fold down the armrest, press the catch (beneath the center rear seat head restraint. With the armrest in position, the head restraint can be opened to access the rear cup holders (see *'CUP HOLDERS', page 114* for further information).

NOTE: *The rear armrest can not be used if a passenger is seated in the center rear seat.*

DRIVER'S SEAT MEMORY FACILITY*

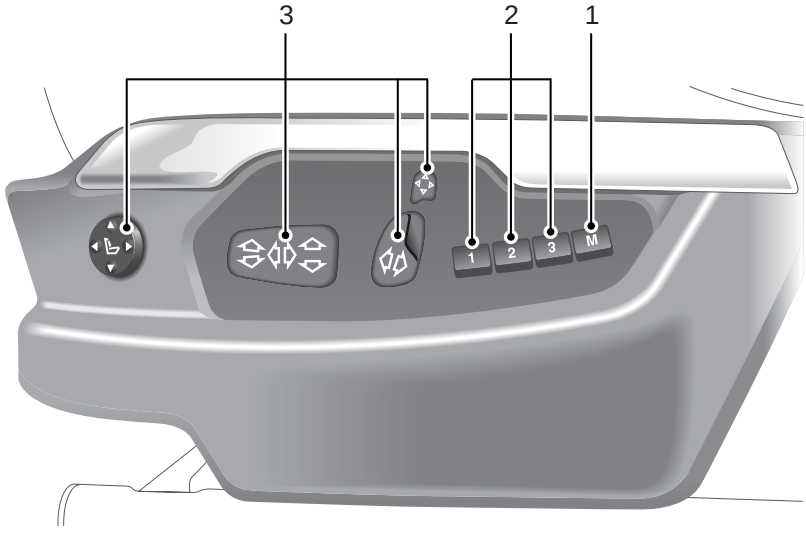

H4038

Model fitted with 'contour' seats illustrated

WARNING

Before activating the seat memory, ensure that the area immediately surrounding the seat is clear of obstructions and that all occupants are clear of moving parts.

1. Memory store button
2. Memory pre-set buttons
3. Seat adjustment controls (see *'POWER OPERATED FRONT SEATS', page 43* for further information).

NOTE: *For information on adjusting the mirrors, see 'EXTERIOR MIRRORS', page 71, or steering wheel, see 'STEERING WHEEL ADJUSTMENT', page 70.*

Your vehicle can memorise up to three different driver seating positions (as well as the associated mirror and steering wheel positions). Enabling three separate drivers to achieve optimum comfort at the touch of a button.

Setting the memory pre-sets
Adjust the seat, exterior mirrors and the steering column to the desired position. Press the memory store button (1) to activate the memory function (switch indicator light illuminates), then press the desired pre-set button (2) to store a seat/mirror/steering wheel setting. A second press of the button (before pressing a pre-set) cancels the memory function (light extinguishes).

If a pre-set is not pressed within approximately 7 seconds of the memory function being activated, the operation will cancel (switch indicator light extinguishes).

Recalling a stored seat position
Open the driver's door, then press the pre-set button associated with the desired driving position. The seat, mirrors and steering column automatically move to the position stored by that pre-set.

If it is required to recall a seating position once the driver's door is shut, insert the starter key and turn it to position 'I'.

NOTE: *To stop seat movement at any time when recalling a memory setting, press any seat adjustment control.*

Convenience seats*
When the vehicle is unlocked using the handset, the vehicle adjusts the driver's seat to the position the seat was in when that particular starter key was last used. Each handset key can therefore be used to store an individual seating position. This feature can also be programmed to adjust the driver's seat when the driver's door is opened.

Convenience seats and associated options can be selected or deselected by a Land Rover retailer.

FOLDING THE REAR SEATS

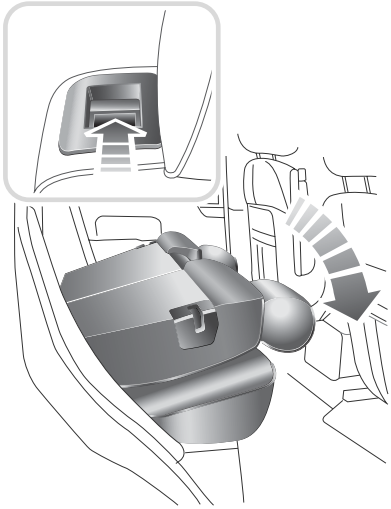

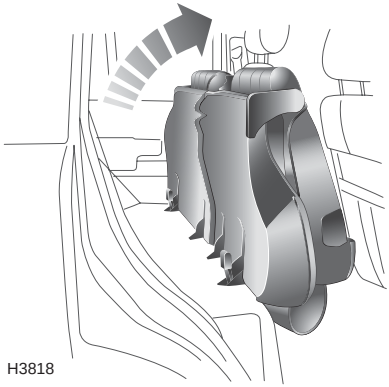

WARNING

DO NOT adjust any part of a seat while the vehicle is in motion.

Vehicle movement may cause the unlatched seat to suddenly shift, potentially causing injury.

One or both parts of the split rear seat can be either partially or fully folded to further increase the rear loadspace.

1. Ensure the head restraints are fully lowered and the armrest is stowed.
2. To release either part of the backrest, lift the lever shown in the inset and then fold the backrest onto the seat base.
3. To fold the whole assembly forward, lift the rear of the seat base upwards, the assembly can be folded forward as shown.

WARNING

It is extremely dangerous to ride in the cargo area. In a collision, people riding in this area are more likely to be seriously injured or killed. Do not allow people to ride in any area of your vehicle that is not equipped with seats and safety belts. Be sure that everyone in your vehicle is in a seat and using a safety belt properly.

Returning the seat to the upright position

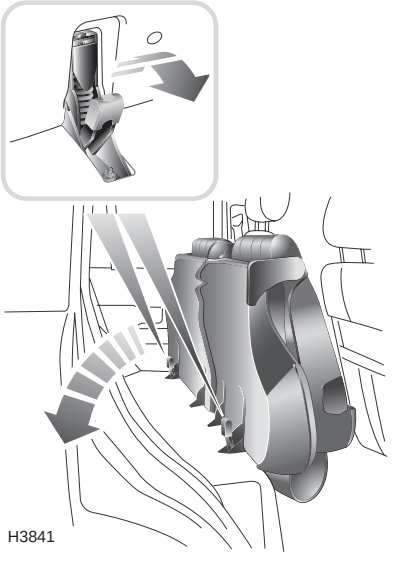

Pull the release lever (see inset) rearwards, then push the seat assembly back onto the floor - the floor catches should latch with the base of the seat. Then raise the backrest.

If the backrest cannot be raised easily, DO NOT force it. This indicates that the seat base has not fully engaged with the floor catches (note that the seat assembly is designed to prevent the backrest from being raised unless the seat is properly secured to the floor).

With the seat base secure, the backrest can be raised and locked in position (none of the RED panel on the release lever should be visible when the backrest is correctly latched).

WARNING

After the seat is returned to the upright position, the latching mechanism should be checked and physically tested to ensure that both the seat base and backrest are secure before driving.

In a frontal impact, if the rear seat is not secured (fully latched), it may swing forward contacting the seat in front of it, increasing the risk of injury or death to occupants in those seats.

HEATED SEATS*

For information on operating the front and rear seat heaters, please refer to *'SEAT HEATERS*', page 107.*

SEAT BELT SAFETY

WARNING

Seat belts are life saving equipment. In a collision, occupants not wearing a seat belt can be thrown around inside, or possibly thrown out of the vehicle. This is likely to result in more serious injuries than would have been the case had a seat belt been properly worn. It may even result in loss of life!

Don't take chances with safety!

DO make sure ALL occupants are securely strapped in at all times - even for the shortest journeys.

The airbag supplemental restraint system (SRS) is designed to add to the overall effectiveness of the seat belts. It does not replace them. SEAT BELTS MUST ALWAYS BE WORN!

Ensure that all seat belts are worn correctly - an improperly worn seat belt increases the risk of death or serious injury in the event of a collision.

DO use the seat belts to secure items of luggage that are to be carried on the seats - in the event of an accident, loose items become flying missiles capable of causing serious injury, or even death.

DO NOT fit more than one person into a belt; this could result in the occupants striking each other and causing injury in the event of a crash.

DO NOT use, or attempt to fit, a seat belt that is twisted or obstructed in any way that could impede its smooth operation. If a belt is twisted, it must be straightened before use. Using a twisted or obstructed seat belt could increase the risk of injury in a crash.

ALWAYS use the seat belt lock (buckle) nearest the wearer. If the belt is locked in the wrong place, the seat belt will not fit correctly and may ride up over the abdomen, causing serious internal injury in a crash.

In a rollover crash, an unbelted person is significantly more likely to die than a person wearing a seat belt.

PREGNANT WOMEN

WARNING

Pregnant women must wear a correctly positioned seat belt; it is safer for mother and unborn child.

There are many ways that the belt can be misused for the sake of comfort, but there is only one way of wearing it safely.

During pregnancy, women should wear the lap belt across the hips below the baby, with the diagonal belt passing across the shoulder, between the breasts and to one side of the baby - if in doubt, consult a doctor.

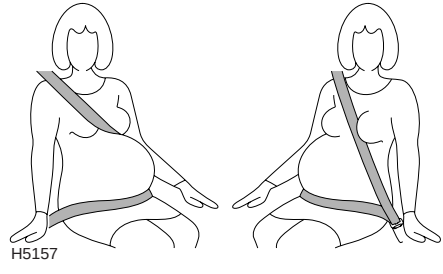

Never place anything between you and the seat belt in an attempt to cushion the impact in the event of an accident. It can be dangerous and reduce the effectiveness of the seat belt in preventing injury.

WEARING SEAT BELTS CORRECTLY

Fastening the seat belts

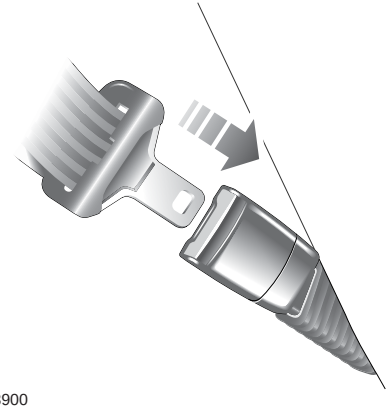

H3900

Inertia reel belts are fitted to all front and rear seating positions.

Draw the belt over the shoulder and across the chest and, ensuring that the webbing is not twisted, insert the metal tongue plate into the buckle nearest the wearer - a ‘CLICK’ indicates that the belt is securely locked.

In some circumstances, perhaps due to the vehicle being parked on a slope, the inertia mechanism may engage, preventing the initial extension of a belt. This is not a fault - ease the belt free and use it.

Adjust the seat belt to eliminate any slack in the webbing. DO NOT slacken the webbing by holding the belt away from the body - to be fully effective, the seat belt must remain in full contact with the body at all times. Also, ensure that the lap belt fits as low on the hips as possible and that the shoulder belt passes across the shoulder without slipping off or pressing on the neck.

Positioning the belt

WARNING

Seat belts are designed to bear upon the bony structure of the body (pelvis, chest and shoulders), and can only be worn safely with the seats in a normal, upright, position.

ALWAYS fit the lap strap as low on the hips as possible (never across the abdomen) and ensure that the diagonal belt passes across the shoulder without slipping off or pressing on the neck.

DO NOT travel with the seat backs reclined steeply rearwards. Optimum benefit is obtained from the seat belt with the seat back set to an angle of not more than 30 degrees from the upright. Seat belts are only effective when they are properly positioned on the body - a steeply reclined seat could allow a passenger to slip under either the shoulder or the lap belt.

DO NOT wear the shoulder belt under your arm. In an accident this could increase your chances of being injured.

Upper anchorage adjustment

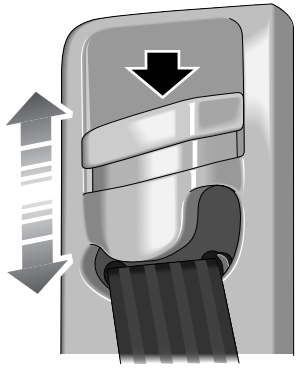

H3803

The height of the seat belt upper anchorage can be adjusted for comfort AND safety on both front seats and also the two outer rear seats. Press down (solid arrow) to release the catch, then lift or push down to adjust the height of the anchorage. For safety, the seat belt should always be worn with the webbing crossing the shoulder MIDWAY BETWEEN THE NECK AND THE EDGE OF THE SHOULDER.

WARNING

Misadjustment of the seat belt could reduce its effectiveness in a crash. Always ensure the anchorage has 'clicked' into one of the locked positions before driving and DO NOT adjust the height once the vehicle is in motion.

Where possible, center rear seat passengers should adjust their position on the seat to enable the seat belt webbing to cross the shoulder without pressing on the neck.

For children, where the seat belt cannot be properly positioned, the use of a booster seat appropriate to the age and size of the occupant is recommended.

Releasing the belt

Press the RED button on the seat belt buckle.

SEAT BELT PRE-TENSIONERS

The seat belt pre-tensioners activate in conjunction with the airbag SRS and provide additional protection in the event of a severe frontal impact on the vehicle (see *'HOW THE SRS/AIRBAG SYSTEM WORKS', page 64*). The pre-tensioners automatically retract the seat belts fitted to the front seats. This reduces any slack in both the lap and diagonal portions of the belts, thereby reducing forward movement of the belt wearer in the event of a severe frontal collision.

The airbag SRS warning light on the instrument panel will alert you to any malfunction of the seat belt pre-tensioners, see *''SRS/Airbag system warning light', page 67*.

If the pre-tensioners have been activated, the seat belts will still function as restraints, and must be worn in the event that the vehicle remains in a driveable condition. However, for the pre-tensioner to function, it must be replaced.

WARNING

The seat belt pre-tensioners will only be activated once and then MUST BE REPLACED by a Land Rover retailer. Failure to replace the pre-tensioners will reduce the efficiency of the vehicle's front restraint system.

After any frontal impact, always have the seat belts and pre-tensioners checked and, if necessary, replaced by a Land Rover retailer.

In the interests of safety, it is recommended that removal or replacement of the front seats and seat belts should only be carried out by a Land Rover retailer.

NOTE: *The seat belt pre-tensioners will NOT be activated by rear, side or minor frontal impacts.*

Service information

WARNING

DO NOT attempt to service, repair, replace, modify or tamper with any part of the pre-tensioner and airbag SRS, or wiring in the vicinity of a pre-tensioner or airbag SRS component; this could cause the system to activate, resulting in personal injury.

After fifteen years from the original date of registration (or the installation date of a replacement pre-tensioners), some components will need to be replaced by a Land Rover retailer (note the 'Seat belt pre-tensioner replacement date' shown in the Passport to Service).

In addition, ALWAYS contact your retailer if:

- an airbag inflates.
- a pre-tensioner activates.
- the front or side of the vehicle is damaged, even if the pre-tensioner has not activated.

CARING FOR SEAT BELTS

WARNING

DO NOT allow foreign matter (particularly sugary food and drink particles) to enter the seat belt locks - such substances can render the locks inoperative.

Regularly inspect the belt webbing for signs of fraying, cuts and wear, and also pay particular attention to the condition of the fixing points and adjusters.

DO NOT bleach or dye the webbing. Clean the webbing using warm water and non-detergent soap only - allow to dry naturally and DO NOT retract or use the belts until they are completely dry.

Always replace a seat belt that shows signs of webbing wear or has withstood the strain of a severe vehicle impact.

Testing inertia reel belts

- With the seat belt fastened, give the webbing near the buckle a quick upward pull. The buckle must remain securely locked.
- With the seat belt unfastened, unreel the webbing to the limit of its travel. Check that unreeling is free from snatches and snags and then allow the belt to FULLY retract.
- Partially unreel the webbing, then hold the tongue plate and give it a quick forward pull. The mechanism must lock automatically and prevent any further unreeling.

If a seat belt should fail any of these tests, contact your retailer immediately.

WARNING

Always replace a seat belt that shows signs of webbing damage or has withstood the strain of a severe vehicle impact.

CHILD RESTRAINTS FOR SMALL CHILDREN AND BABIES

Infants and children too small for adult seat belts should be restrained in a child safety seat or restraint system appropriate to their age and/or size, and which is approved for use in your vehicle.

Child seats and restraint systems designed for your vehicle will be one of two types:

- Those secured in vehicle seats by lap belts (or the lap belt portion of a lap/shoulder belt),
- 'LATCH' type child restraints employing anchor bars built into the rear seat frame.

Some child restraint systems also incorporate a tether strap which can be attached to an anchorage point on the vehicle. Information about tether strap attachment points and the seat belt locking mechanism, which is used to restrain child seats and restraints is shown later in this section.

CAUTION: When fitting child seats and restraint systems, always ensure that the manufacturer's fitting instructions are followed exactly. Note that crash statistics show that children are safer when properly restrained in the rear seating positions than in the front.

CHILD RESTRAINTS FOR LARGER CHILDREN

In a situation where a child is too large to fit into a child safety seat, but is still too small to safely fit the 3 point seat belt properly, a booster seat MUST be used. Follow the manufacturer's fitting instructions exactly, then adjust the seat belt to suit (see *'Upper anchorage adjustment', page 55*).

WARNING

DO NOT allow a baby or infant to be carried on the lap. The force of a crash can increase effective body weight by as much as 30 times, making it impossible to hold on to the child.

ALWAYS transport children 12 years old and under in the back seat and always properly use appropriate child restraints.

Children typically require the use of a booster seat appropriate to their age and size, thereby enabling the seat belts to be properly fitted, reducing the risk of injury in a crash.

Children could be endangered in a crash if their child restraints are not properly secured in the vehicle.

DO NOT use a child seat that hooks over the seat back. This type of seat cannot be satisfactorily secured, and is unlikely to be safe for your child.

Never leave a child unattended in your vehicle.

Vehicles fitted with a passenger airbag
Children under 12 years should travel in the rear of the vehicle at all times. Crash statistics show that children are safer when properly restrained in the rear seating positions than in the front.

However, if it is essential that a child travel in the front, set the seat fully rearward and seat the child in an approved, FORWARD FACING child seat.

The above symbol affixed to the passenger side ‘B’ post of your vehicle, warns against the use of a REAR FACING child seat in the front passenger seat, when a passenger airbag is fitted. This type of child seat could cause serious injury or death to a child in the event of an airbag deployment.

Take careful note of all labels concerning child restraint useage, attached to your vehicle.

WARNING

UNDER NO CIRCUMSTANCES SHOULD A REARWARD FACING CHILD SEAT BE INSTALLED IN ANY FRONT PASSENGER SEAT POSITION. INFLATION OF THE AIRBAG COULD RESULT IN SERIOUS INJURY OR DEATH TO THE CHILD.

Seat belt locking mechanism
All front passenger and second row seat belts have a special locking mechanism which aids the securing of child restraints. The mechanism is used to secure a child restraint as follows:

1. Attach the seat belt to the child restraint in accordance with the manufacturer's instructions.
2. Insert the metal tongue of the seat belt into the lock ensuring that it engages with a 'click'.
3. Pull on the shoulder section of the belt until it is fully extended.
4. Allow the belt to retract. A 'clicking' sound will confirm that the mechanism has engaged.
5. Remove all slack from the mechanism, by pulling upwards on the shoulder belt, immediately above the child restraint.
6. Evaluate the tightness of the installation by rocking the child seat back and forth to ensure it is tight and stable.
7. If the child seat needs to be tightened further, remove the metal tongue of the seat belt from the buckle and feed some of the shoulder belt webbing back into the reel (thereby shortening the belt). Then reattach the metal tongue into the buckle (if the belt has been tightened correctly, this will take some effort).
8. Re-evaluate the tightness of the installation. If the child seat is still too loose, repeat the above procedure, making the belt incrementally shorter (and therefore tighter). It may be necessary to put your weight onto the seat (to compress the seat cushion) in order to fasten the belt.

To deactivate the locking mechanism, unlatch the seat belt and allow it to fully retract.

TETHER STRAP ANCHORAGES

Provision is made in the rear seats for the fitting of up to three child seats, of the type that requires tether strap anchorage points.

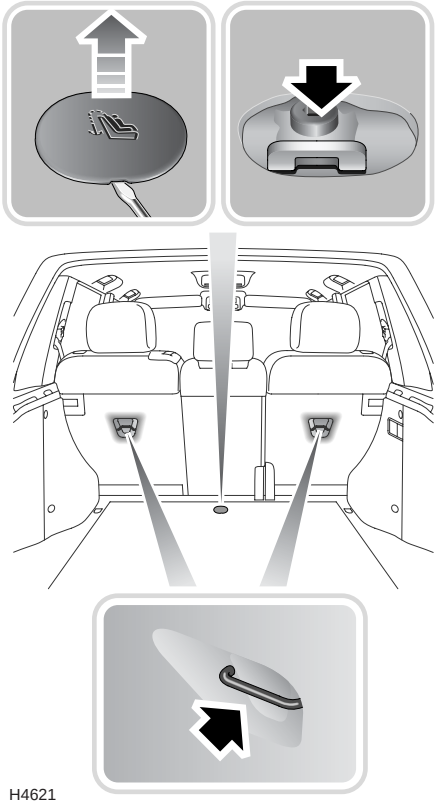

WARNING

Child restraint anchorages are designed to withstand only those loads imposed by correctly fitted child restraints. Under no circumstances are they to be used for adult rear seat belts or for harnesses for attaching other items or equipment to the vehicle.

There are three tether strap anchorage points. These should be used to attach tether straps from child seats or restraint systems. Two anchorage points are fitted to the back of the second row seat, these should be used for the two outer seating positions. A third single anchorage point is located in the center of the floor panel behind the rear center seat for attaching a tether strap from the center seat position. Remove the cover to reveal the center child-seat anchoring point.

Attaching tether straps

1. Install the child restraint securely in one of the second row seating positions.
2. Pass the tether strap over the back of the vehicle seat and beneath the underside of the head restraint.
3. Attach the clip on the head of the tether strap to the tether anchor on the back of the vehicle seat (or, for the center seating position, on the tether anchor in the floor panel behind the rear center seat)..
4. Tighten the tether strap according to the manufacturer's instructions to remove any slack in the webbing.

WARNING

Always follow the child seat or restraint system manufacturer's instructions when fitting tether straps.

When fitting a child seat or restraint system, always pass the tether strap over the top of the seat back and beneath the underside of the head restraint.

If a child seat or restraint system is to be fitted to the center seating position, the center armrest must be in the stowed position (folded into the seat).

‘LATCH’ TYPE CHILD RESTRAINTS

‘LATCH’ (Lower Anchors and Tether for Children)

The ‘LATCH’ three-point type child restraint system complies with Federal Motor Vehicle Safety Standards and is approved for fitting in your vehicle.

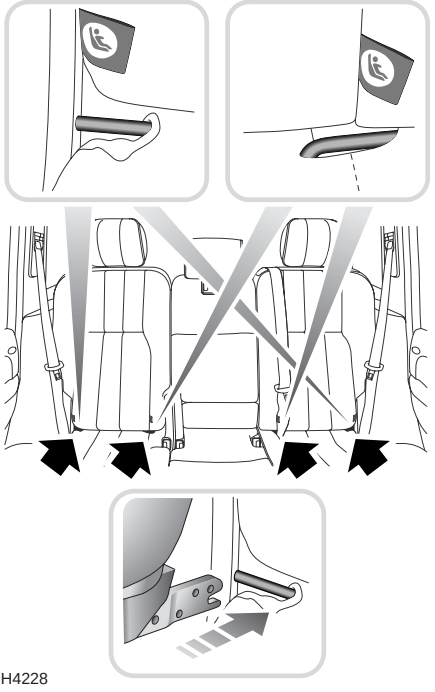

H4228

Fitting the restraints

This type of child restraint system should only be fitted in the two outer seating positions of the second row seats. Anchor bars built into the rear seat frame enable ‘LATCH’ type restraints to be securely attached to the vehicle seat in these positions only. The anchor bar locations are shown in the illustration above.

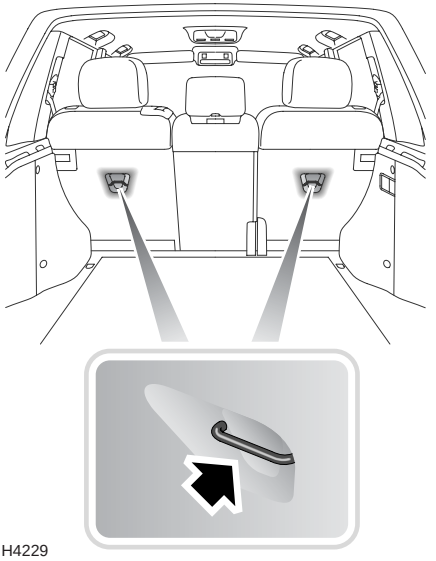

H4229

Anchoring the tether strap
Pass the tether strap over the top of the seat and beneath the underside of the head restraint. Attach the clip on the head of the tether strap to the appropriate tether anchor.

WARNING

If the restraint is not correctly anchored, there is a significant risk of injury to the child, in the event of a collision or emergency braking.

WARNING

DO NOT attempt to fit 'LATCH' type restraints to the center seating position - the anchor bars are designed to hold restraints in the outer seating positions only.

When fitting the 'LATCH' type of child restraint, always follow the instructions supplied by the manufacturer of the restraint.

Once the restraint is installed, you are recommended to test the security of the installation before seating the child. Attempt to twist the restraint from side to side and to pull the restraint away from the vehicle seat; then check that the anchors are still securely in place.

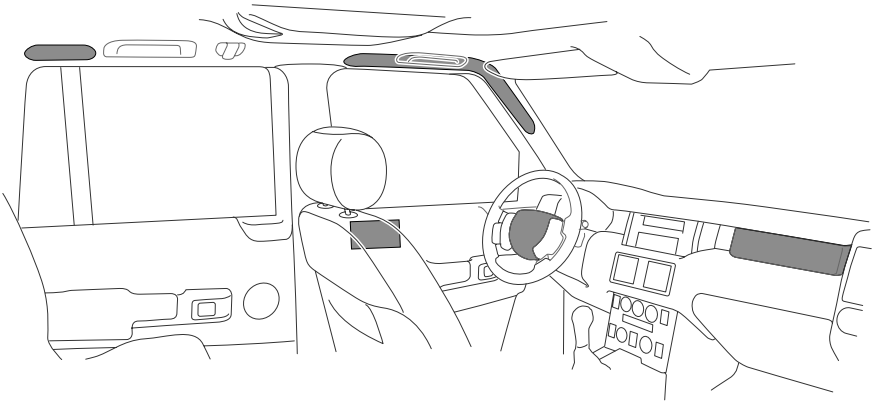

H5002

SRS/AIRBAG

The airbag supplementary restraint system (SRS) incorporates front, side thorax and side head airbags for the driver and front passenger and side head airbags for the outer rear passengers (see illustration for airbag locations).

WARNING

Always remember; the SRS/airbags are a supplemental restraint system providing ADDITIONAL protection in certain types of collision only - they DO NOT replace the need to wear a seat belt. To reduce the risk of severe injury or death in the event of a crash, all occupants in all seating positions, including the driver, should always wear their seat belt, whether or not an airbag is present at that seating position!

Provided the occupants of the vehicle are correctly seated, with seat belts properly worn, the airbags will provide additional protection to the chest and facial areas of the front seat occupants in the event of the vehicle receiving a severe frontal impact, and to the side of the body facing the impact of front seat occupants, if a severe side collision occurs.

Side head air bags will afford additional protection to the side of the head facing the impact for the front seat and outer rear seat occupants, in the event of a side collision.

NOTE: *Inflation and deflation of the side thorax and front airbags takes place very quickly and will not protect against the effects of secondary impacts that may occur. Side head airbags deflate at a slower rate and therefore do offer some additional protection in the event of a secondary impact.*

WARNING

DO NOT allow occupants to obstruct the operation of the airbag modules by placing their feet, knees or any part of their person in contact with, or close to, an airbag module whilst the vehicle is moving.

WARNING

Following inflation, some SRS/airbag components are hot - DO NOT touch until they have cooled.

Even with SRS/airbag equipment fitted, seat belts must ALWAYS be worn because inflation and deflation of the side thorax and front airbags takes place very quickly and will not provide protection against the effects of secondary impacts that can occur during multiple vehicle collisions.

National Highway Traffic Safety Administration (NHTSA) recommends a minimum distance of 10 inches (25 cm) between an occupant's chest and the driver's air bag module.

NOTE: *The illustration below shows the location of the airbags relative to the 'A', 'B/C' and 'D' posts.*

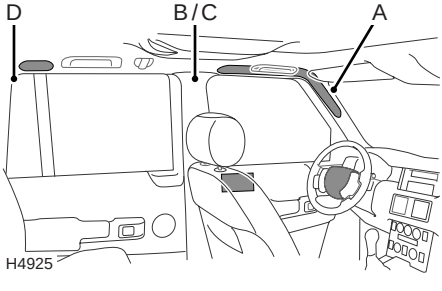

WARNING

The airbag module inflates with considerable speed and force. For your safety:

An inflating airbag can cause facial abrasions and other injuries. The injurious effects of airbag inflation can be reduced, by ensuring driver and passenger are seated correctly, with the seat moved back as far as is practical, and the seat belts worn correctly.

NEVER attach or position items (including accessory items) to an airbag module cover, including; the roof lining, 'A' and 'B/C' post finishers and the inside of the front doors, or place items of hand luggage or any objects on the top of a module cover; these could interfere with the inflation of the airbag, or if the airbag inflates, be propelled inside the vehicle causing injury or death to the occupants.

Activation of an airbag creates dust, causing possible breathing difficulties for asthma sufferers or other people with respiratory problems. If an airbag is activated, any occupant who suffers from breathing difficulties should; either leave the vehicle as quickly as possible, or obtain fresh air by fully opening the windows or doors.

Both front seating positions are equipped with knee bolsters to provide knee protection in the event of an impact. DO NOT modify the bolsters, or mount after-market equipment on or behind them.

Seating positions

WARNING

To reduce the risk of accidental injury from inflating airbags, seat belts should be correctly worn at all times. In addition, both driver and front seat passenger should adjust their seat to provide the maximum practical distance from the front airbags. Front seat and outer rear seat occupants should also ensure that a gap is maintained between the upper torso and head, and the side of the vehicle, to enable unobstructed inflation of the side thorax for the front seat occupants and side head airbags for both front and rear passengers.

Occupants not properly restrained in designated seating positions are subject to serious injury or death upon airbag deployment.

Never place your arm over an air bag module as a deploying air bag can result in serious arm fractures or other injuries.

In order to provide optimum protection in the event of a severe impact, it is necessary for the airbags to deploy with considerable speed.

An inflating airbag can cause facial abrasions and other injuries if the occupant is too close to the airbag at the time of its deployment.

Occupant detection

A sensor in the front passenger seat detects whether or not the seat is occupied. If, in the event of an accident, the sensor has detected that there is no front passenger present, the front passenger airbag systems (front, side thorax and side head protection airbags) will not activate.

HOW THE SRS/AIRBAG SYSTEM WORKS

In the event of a collision, the airbag control unit monitors the rate of deceleration or acceleration induced by the collision, to determine whether the airbags should be deployed.

Operation of the SRS/airbag system is dependent entirely on the rate at which the vehicle's passenger compartment changes speed as a result of a collision. The circumstances affecting different collisions (vehicle speed, angle of impact, type and size of object hit, for example), vary considerably and will affect the rate of acceleration or deceleration accordingly.

NOTE: *The SRS/airbag system is not designed to operate as a result of rear collisions, minor frontal or side Impacts, roll over accidents; nor will it operate as a result of heavy braking or driving over bumps and potholes. However, if as a result of an impact, you believe the airbags should have deployed and they failed to do so, please call 1(800)637-6837 for advice, or arrange for a Land Rover representative to inspect the vehicle to determine whether the system operated correctly.*

It follows, therefore, that significant superficial damage can occur without the airbags deploying or, conversely, that a collision that results in a relatively small amount of structural damage may cause the airbags to be deployed.

Dual stage deployment
The front airbags deploy in two stages, depending on the severity of the frontal collision. The unit monitors the rate of deceleration or acceleration during the impact and, if a relatively minor frontal impact in which airbag deployment is warranted occurs, the airbags only inflate sufficiently to help protect the front seat occupants from the forward movement caused by the impact. If, however the system detects a relatively severe frontal impact, the airbags will fully inflate, thereby providing maximum protection to the front seat occupants.

Airbag deployment

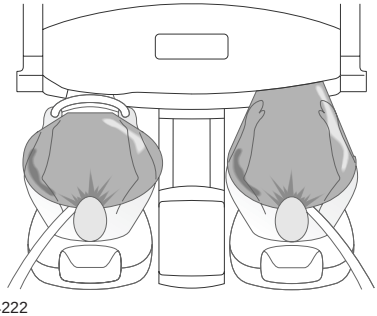

H4222

NOTE: *Airbags will only deploy when they are required to supplement the restraining force of the seat belts.*

In the case of a severe frontal collision, both front airbags will be deployed if the passenger seat is occupied. In the case of a severe side collision, only the side thorax airbags and side head impact protection airbag on the impacted side of the vehicle will inflate. However, there may also be impact conditions whereby one set of side and both front airbags deploy at the same time, or where front and side airbags respond separately as a result of a secondary impact occurring after the initial collision has taken place.

WARNING

An inflating airbag can cause facial abrasions and other injuries. Reduce the risk of injury by ensuring that front seat occupants are wearing their seat belts and are seated correctly, with the seat as far back as is practical.

Airbag inflation is virtually instantaneous and occurs with considerable force, accompanied by a loud noise. The inflated bag, together with the seat belt restraint system, limit the movement of an occupant, thereby reducing the risk of injury to the head and upper torso.

When an airbag inflates, a fine powder is released. This is not an indication of a malfunction. However, the powder may cause irritation to the skin and should be thoroughly flushed from the eyes and any cuts or abrasions of the skin. After inflation, front and side thorax airbags deflate immediately (side head protection airbags deflate slowly). This provides a gradual cushioning effect for the occupant and also ensures that the driver's forward vision is not obscured.

WARNING

After inflation, some airbag components are hot - DO NOT touch until they have cooled.

Side airbags

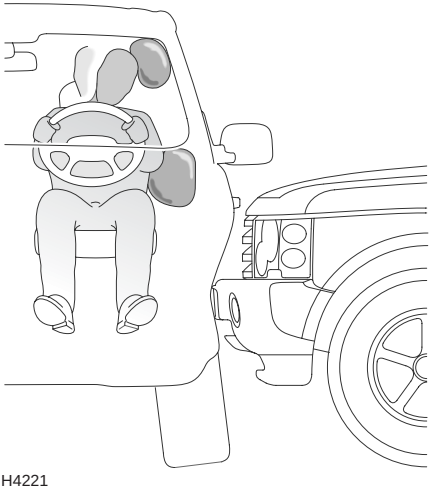

H4221

WARNING

Ensure that a gap is maintained between the upper torso and the side of the vehicle, to enable unobstructed inflation of the side thorax airbags.

Side thorax airbags are designed to help protect the thorax region of the torso and will only deploy in the event of a severe side impact. They will NOT inflate as a result of frontal or rear impacts only or in the event of a minor side impact.

In the event of a severe side collision, the airbags on the impacted side of the vehicle deploy from the door, rapidly inflating to form a cushion between the front seat occupants and the side of the vehicle. The airbags on the non-impacted side of the vehicle will not be deployed.

Side head impact protection

NOTE: *For the side head impact airbags to deploy correctly, the roof lining and front pillar trim must be undamaged and fitted correctly. Any damage or suspect fitting should be referred to a Land Rover retailer for examination.*

Side head impact airbags are designed to help protect the head in the event of a severe side impact only. They will NOT inflate as a result of frontal or rear impacts alone or in the event of a minor side impact.

The side head impact protection modules are located behind the roof lining and front pillar finisher, above the doors. In the event of a severe side collision, the airbag pushes out from behind the roof lining and front pillar finisher as it inflates. The side head impact airbag remains inflated for longer than the other airbags, to provide additional head protection in the event of a secondary impact.

SRS/Airbag system warning light

A warning light mounted on the instrument panel will alert you to any malfunction of the SRS/airbag system. The SRS/airbag system should always be checked by a retailer if any of the following symptoms occur. These indicate a fault and may result in the SRS/airbag not operating as required in the event of an impact.

- The warning light fails to illuminate when the starter switch is turned to position 'II'.
- The warning light fails to extinguish within approximately four seconds after the starter switch is turned to position 'II'.
- The warning light illuminates after the engine is started, or while the vehicle is being driven.

When the starter switch is turned to position 'II', the diagnostic control unit monitors the readiness of the system's electrical circuits.

The elements of the system being monitored include:

- SRS warning light
- Rotary coupler
- Airbag modules
- Seat belt pre-tensioners
- Airbag diagnostic control unit
- Crash sensors
- Airbag wiring harnesses
- Seat occupancy sensor

CHILD SEATS

Children aged 12 years and under are more likely than adult occupants to receive injuries from inflating airbags. For this reason, it is recommended that children should always be seated in the second row of seats in a child safety seat or restraint system appropriate to their age and size, see *'CHILD RESTRAINTS FOR LARGER CHILDREN', page 57*.

If it is necessary for a child to travel in the front, set the seat fully rearwards and use a front facing child seat ONLY.

WARNING

DO NOT USE A REAR FACING CHILD SEAT IN ANY FRONT PASSENGER SEAT LOCATION. If the passenger airbag inflates, a child in a rear facing child restraint could sustain serious injury or death.

Children could be endangered in a crash if their child restraints are not properly secured in the vehicle. Be sure to install child restraints according to the manufacturer's instructions.

Under no circumstances should a rear facing child seat be installed facing forward in any seating position.

Always transport children 12 years and under in the second row of seats and always properly use appropriate child restraints.

SERVICE INFORMATION

WARNING

DO NOT attempt to service, repair, replace, modify or tamper with any part of the SRS/airbag system, or wiring in the vicinity of an SRS/airbag system component; this could cause the system to activate, resulting in personal injury.

Any notable damage to SRS components or covers, e.g. tears, burns, holes, chemical/ detergent damage or previous accidental damage, etc, however produced, may cause the SRS module/s to fail. Ensure that any damaged components are repaired or replaced by a Land Rover retailer.

After fifteen years from the original date of registration (or the installation date of a replacement SRS/airbag), some components will need to be replaced by a Land Rover retailer (note the airbag module replacement dates shown in the Passport to Service).

In addition, ALWAYS contact your retailer if:

- an airbag inflates.
- the front or side of the vehicle is damaged, even if the airbag has not inflated.
- any part of an airbag module cover shows signs of cracking or damage.

WARNING

The components that make up the SRS/airbag system are sensitive to electrical or physical interference, either of which could easily damage the system and cause inadvertent operation or a malfunction of the airbag.

For your safety it is recommended that you seek the assistance of a Land Rover retailer to carry out any of the following:

- ***Removal or repair of any wiring or component in the vicinity of any of the SRS components, including the steering wheel, steering column, door trim, roof lining and instrument and facia panels.***
- ***Installation of electronic equipment such as a mobile phone, two-way radio or in-car entertainment system.***
- ***Modification to the front or side of the vehicle, including the bumper and chassis.***
- ***Attachment of accessories to the front or side of the vehicle such as a winch or brushbar.***

Disposing of vehicles

If you sell your vehicle, be sure to inform the new owner that the vehicle has an SRS/airbag system and make the new owner aware of the airbag module replacement date shown in the Passport to Service.

If your vehicle is to be scrapped; uninflated airbags are potentially very dangerous and must be safely deployed in a controlled environment by qualified personnel, before a vehicle is scrapped.

See your Land Rover retailer for advice on safe deployment of SRS/airbags.

STEERING WHEEL ADJUSTMENT

WARNING

DO NOT adjust the steering wheel position while the vehicle is in motion. This is extremely dangerous!

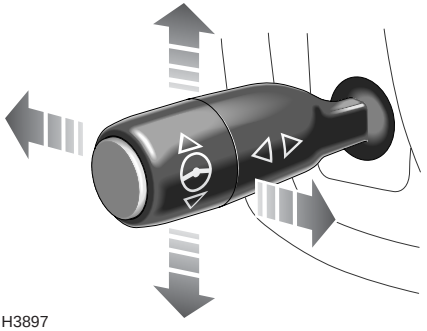

The steering wheel position can be adjusted in four directions, corresponding with the movement of the adjustment lever, to suit your driving position.

With the vehicle stationary, move the lever up or down to adjust the height of the steering wheel.

Move the lever forwards or rearwards, to move the steering wheel further away from, or closer to, the body.

STEERING WHEEL POSITION MEMORY*

The finalised steering wheel position is stored in memory and referenced to the starter key in use when the position was set.

When that key is next used, the stored settings associated with it will be actioned.

This enables different steering wheel settings to be stored on different keys, helping driving position to be easily optimised for more than one driver.

NOTE: *On vehicles fitted with the driver's seat memory facility, up to three different steering column positions can be stored in the seat memory, this enables the driver to recall the optimum steering wheel position at the touch of a button - for further information, please refer to* *'DRIVER'S SEAT MEMORY FACILITY*', page 49.*

EXTERIOR MIRRORS

NOTE: *The right-hand mirror glass is convex, providing a wider field of vision. As a result, objects viewed in the mirror are closer than they appear.*

Mirror adjustment

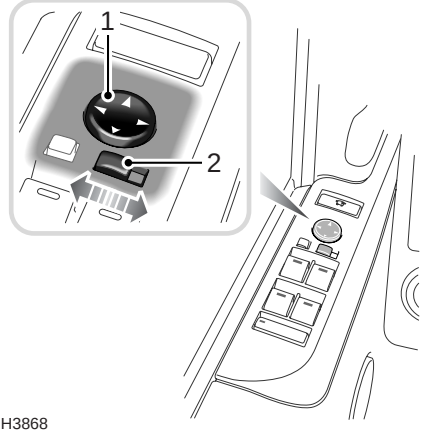

H3868

- Move the lower control (2) to the left or right-hand position to select either the left or right hand mirror.
- With the starter switch turned to position 'II', push the appropriate arrow on the mirror adjust control (1) to tilt the mirror glass up/down/left or right.

The door mirrors have integral heating elements which disperse ice or mist from the glass. These will operate automatically with the starter switch in position 'II', depending on external temperature.

NOTE: *On vehicles fitted with the driver's seat memory facility, up to three different exterior mirror positions can be stored in the seat memory, this enables the driver to recall the optimum mirror position at the touch of a button - for further information, please refer to 'DRIVER'S SEAT MEMORY FACILITY*', page 49.*

Folding the mirror body
The door mirrors are designed to fold forwards or rearwards on impact. They can also be folded back towards the side windows into a 'park' position to enable the vehicle to negotiate narrower openings.

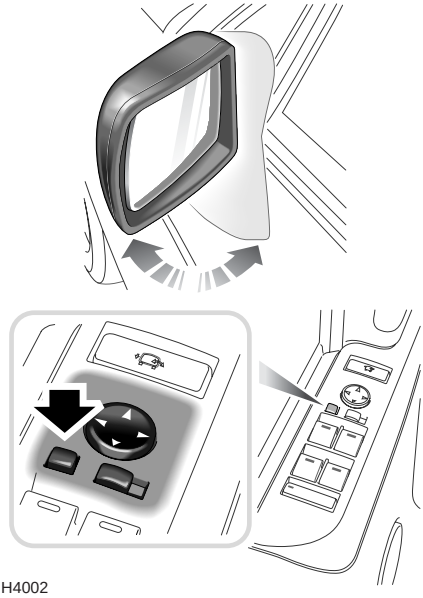

Press the mirror-fold button (arrowed in inset) once to fold the mirrors into the side windows. Press again to return the mirrors to the driving position.

NOTE: *Mirror folding is disabled if vehicle speed exceeds 6 mph (10 km/h).*

If the mirrors are accidentally knocked out of position (i.e. with one mirror extended and the other in the 'parked' position), an additional operation of the switch will re-synchronise them.

Automatic dimming
On some models, the mirrors are equipped with an electrochromatic dimming function that 'dims' the mirror to reduce glare from the headlights of following vehicles at night.

Automatic mirror dipping
Vehicles fitted with driver's seat memory have a pre-stored function, which causes the passenger's side mirror to dip whenever reverse gear is selected, giving the driver a view of the curbside. This facility is only available if the mirror select button ('2' on previous page), is set to the driver's side.

INSTRUMENT PANEL

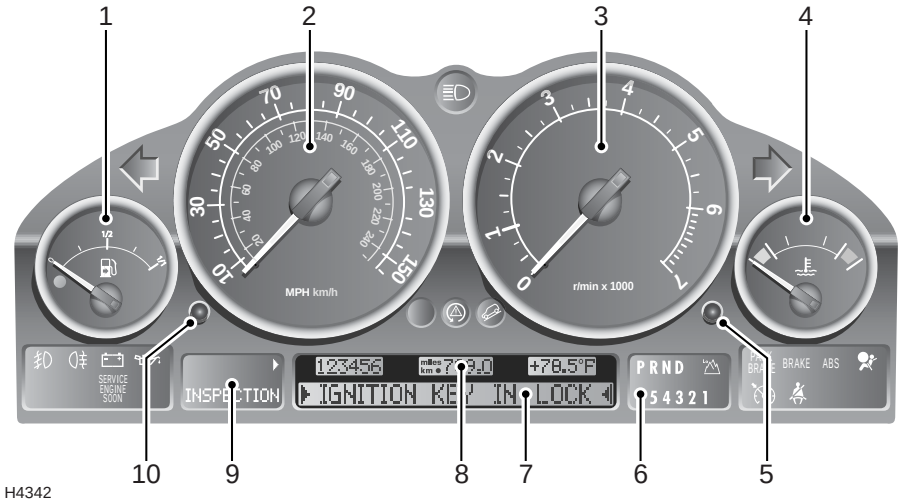

1. Fuel gauge
The pointer drops to zero when the starter switch is turned off, but quickly rises to show the level of fuel in the tank when the switch is turned to position 'II'. After refuelling, the gauge rapidly rises to reflect the increase of fuel in the tank.

When the fuel remaining in the tank is a minimum of 3 gallons (12 litres), the AMBER low fuel warning light in the fuel gauge illuminates. If the light illuminates, refuel at the first opportunity.

The small arrow visible in the fuel pump symbol on the gauge indicates the side of the vehicle on which the fuel filler is located - a useful reminder to help you position the vehicle on the correct side before refuelling.

CAUTION: NEVER allow vehicles to run out of fuel (the resultant misfire may destroy the catalytic converter).

2. Speedometer
Indicates road speed in miles and kilometres per hour.

3. Tachometer
Indicates engine speed in revolutions per minute (x 1000). In normal driving conditions the engine is most fuel efficient between 2000 and 3000 rev/min.

4. Temperature gauge
Once the engine coolant has reached its normal operating temperature, the pointer will rise to a position midway between the RED and BLUE segments of the gauge (the precise position will vary according to climatic conditions).

If the pointer moves towards the RED segment, this indicates that the engine coolant is becoming too hot. Should the pointer move INTO the RED segment and the RED warning light within the gauge illuminates, severe engine damage could occur (under these circumstances, the air conditioning may switch off and engine performance may reduce in order to minimise engine load).

Stop the vehicle as soon as safety permits and switch off the engine and allow to cool down. If the problem persists, seek qualified assistance before continuing.

5. System check control
With the starter key NOT inserted, press and hold the control to check whether any system malfunctions have occurred. If faults exist, they will be listed in turn in the main message center until the control is released. If no malfunctions have occurred, 'CHECK CONTROL OK' is displayed. See *'MAIN MESSAGE CENTER', page 76*, for further information. Any messages will also be displayed during driving and when the starter switch is turned off.

This control button is also used in conjunction with the Service Interval Indicator, see *'SERVICE INTERVAL INDICATOR', page 81*.

6. Gear selector position display
This shows the current gear lever position and indicates when low range has been selected. See *'GEAR SELECTOR DISPLAY', page 81*, for further information.

7. Main message center
Displays all warning and information messages submitted by the vehicle systems. For further information concerning messages and their meanings, refer to *'MAIN MESSAGE CENTER', page 76*.

8. Total distance (odometer) and trip recorder
With the starter switch turned to position 'II', the display indicates the total distance travelled by the vehicle, and also shows the most recent individual journey distance. In some markets, the display can be set to show either miles or kilometres. To convert from one to another, press and hold the trip recorder reset button for more than two seconds.

9.Service Interval Indicator
This briefly shows a countdown to the next oil service or inspection, when the starter switch is turned on. See *'SERVICE INTERVAL INDICATOR', page 81*, for further information.

10. Trip recorder reset button
Press briefly to return the trip recorder display to zero.

TRIP COMPUTER - FUNCTION SELECTION

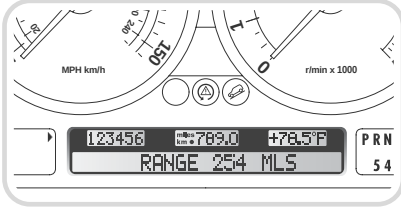

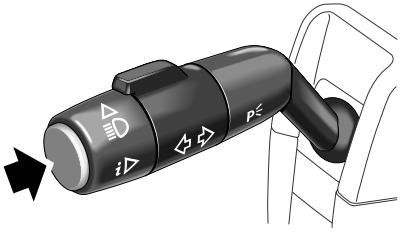

H4347

The trip computer utilises the message center in the instrument pack and provides useful information to assist the driver to calculate fuel stops, journey times and distances.

When the starter switch is in position ‘II’, the different trip computer statistics can be viewed in turn by pressing the button on the end of the direction indicator stalk repeatedly until the relevant statistic is displayed. The statistics are displayed in the following order:

- Speed limit.
- Distance (from destination).
- Range.
- Estimated time of arrival.
- Date.
- The current time.
- Stopwatch.
- Fuel consumption 1.
- Fuel consumption 2.
- Average speed.

The driver has the option to select which of the above functions are displayed and also in which order. For further information, consult your *‘Audio & Navigation’* Handbook.

MAIN MESSAGE CENTER

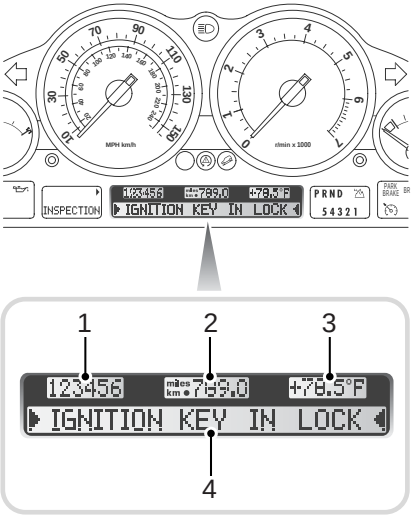

H4344

1. Digital odometer. Displays the total distance travelled by the vehicle.
2. Trip recorder. Displays the distance travelled in miles or kilometres for individual journeys.
3. External temperature display.
4. Warning message and information display.

Driver warning and information messages are displayed in the message center. Messages have different priority levels and are grouped into the following categories.

Messages are displayed when a fault is detected and also when the starter switch is turned off. It is also possible to view messages for up to 3 minutes after the key has been removed from the starter switch, by pressing the system check control switch.

Warning messages

All warning messages are accompanied by an audible warning; however, there are two levels of warning.

A critical warning message is displayed continuously while the starter switch is turned on and is flanked by flashing arrows. It will remain displayed while the fault persists.

A non-critical warning is displayed for approximately 20 seconds, reducing to a minimum of 2 seconds if other warning messages are pending.

DO NOT ignore warning messages.
TAKE CORRECTIVE ACTION IMMEDIATELY
(see *'WARNING & INFORMATION MESSAGES', page 77*).

Information messages

Information messages will be displayed as and when applicable, and also when the starter switch is turned on or off. Where the message requires action by the driver - TAKE CORRECTIVE ACTION AS SOON AS POSSIBLE,
(see *'WARNING & INFORMATION MESSAGES', page 77*).

WARNING & INFORMATION MESSAGES

Warnings and information messages appear in the Message Center in order of importance, with critical warnings taking priority. The following table contains an alphabetical list and does not imply an order of priority

Message	Meaning	What to do?
ACCESS MAX 25MPH	Crawl mode is selected.	Do not drive at speeds exceeding 25 mph (40 km/h) whilst in crawl mode or the vehicle will return to standard height.
AIR SUSP.INACTIVE + MAX 40 mph (alternating message)	The air suspension system has overheated and has temporarily shut down.	Drive with caution and be aware that the air suspension system will have reduced functionality. If message persists for more than 25 minutes, have the vehicle checked by a retailer as soon as possible.
APPLY PARKING BRAKE	The vehicle is in ‘P’ (Park) and transfer neutral has been selected and the starter switch has been turned off, but the parking brake has not been applied.	Apply the parking brake, or if the vehicle is to be towed on all four wheels, turn the starter switch to position ‘I’ or ‘II’.
CHECK BRAKE FLUID	Fluid level is too low.	Stop the vehicle as soon as safety permits and top-up the brake fluid. Have the source of a possible leak checked by your retailer.
CHECK BRAKE PADS	The brake pads are reaching their wear limit.	Drive cautiously and consult your retailer at the earliest opportunity.
CHECK CONTROL OK	No system faults have been detected by the vehicle diagnostics system.	No action required.
CHECK COOLANT LEVEL	Coolant level is too low.	Top-up with the correct mixture of antifreeze and water at the earliest opportunity. If the problem persists, consult your retailer.
CHECK DIP BEAM LIGHT	A bulb has failed or there is a fault in the electrical circuit.	Check/replace the bulb or consult your retailer.
CHECK ENGINE OIL LEV	The oil level is at the absolute minimum.	Stop the vehicle as soon as safety permits and top-up the engine oil to the correct level.
CHECK FRONT FOGLIGHT	A bulb has failed or there is a fault in the electrical circuit.	Check/replace the bulb or consult your retailer.

Message	Meaning	What to do?
CHECK FRONT LIGHT	More than one front light is defective.	Check which lights are defective, replace any failed bulb. If a light is still defective, have the fault rectified by a retailer.
CHECK HIGH BEAM LIGHT	A bulb has failed or there is a fault in the electrical circuit.	Check/replace the bulb or consult your retailer.
CHECK NUMPLATE LIGHT	A bulb has failed or there is a fault in the electrical circuit.	Check/replace the bulb or consult your retailer.
CHECK REAR FOGLIGHT	A bulb has failed or there is a fault in the electrical circuit.	Check/replace the bulb or consult your retailer.
CHECK REAR LIGHT	More than one rear light is defective.	Check which lights are defective and replace any failed bulb. If the light is still defective, have the fault rectified by a retailer.
CHECK SIDE LIGHT	A bulb has failed or there is a fault in the electrical circuit.	Check/replace the bulb or consult your retailer.
CHECK TAIL LIGHT	A bulb has failed or there is a fault in the electrical circuit.	Check/replace the bulb or consult your retailer.
CHECK TRAILER LIGHT	A bulb has failed or there is a fault in the electrical circuit.	Check/replace the bulb or consult your retailer.
COOLANT TEMPERATURE	Coolant temperature is too high.	Stop the vehicle as soon as safety permits and switch off the engine and allow to cool down. Consult your retailer at the earliest opportunity.
DOOR OPEN	A door is open (displayed as the vehicle moves off from stationary).	Stop the vehicle as soon as safety permits and close the door.
DSC INACTIVE	A fault has been detected in the DSC system.	The vehicle is driveable, but proceed with caution. Consult your retailer at the earliest opportunity.
EEPROM LCMC	The main lighting switch has a fault.	Consult your retailer at the earliest opportunity.
ENGINE FAILSAFE PROG	A fault has been detected in the engine electronics.	The vehicle is driveable, but with reduced engine speed and power. Drive with caution, and consult your retailer at the earliest opportunity. Note that the engine will be more prone to stalling and difficulties starting.

Message	Meaning	What to do?
EXTERNAL TEMP X°C/F	The exterior temperature is equal to or less than 37°F (3°C).	This indicates freezing conditions, appropriate defrosting precautions should be taken before driving and ice may be present on the roads.
FASTEN SEAT BELTS	The driver's or front passenger's seat belt is not correctly fastened.	Ascertain which seat belt is undone and correctly fasten the belt.
FUEL INJECT.SYSTEM	A fault has been detected in the fuel injection system.	Seek qualified assistance.
HDC INACTIVE	A fault in the Hill Descent Control system has occurred.	Do not attempt the planned descent/ascent and consult your retailer at the earliest opportunity.
HDC TEMP.NOT AVAIL.	The Hill Descent Control system has been over-used and temporarily shut down.	Do not attempt the planned descent/ascent until the system has cooled (the message is no longer displayed).
HEADLIGHT DELAY	You have selected headlight delay - headlights will switch off automatically.	No action required.
HIGH RANGE	HIGH range has been selected in the transfer gearbox.	Select LOW range if required.
KEY BATTERY LOW	The battery in the handset key is low on charge.	Replace the handset key battery.
KEY IN IGNITION LOCK	The key has been left in the starter switch and the driver's door has been opened.	Remove the key from the starter switch.
LIGHTS ON	The key has been removed from the starter switch and the lights have been left on.	Turn the light switch to the off position, if the lights are no longer required.
LOW RANGE	LOW range has been selected in the transfer gearbox.	Select HIGH range if LOW range is not required.
LOW SCREENWASH	Fluid level is too low.	Top-up the washer reservoir at the earliest opportunity.
MANUAL MODE	The transmission is in manual mode.	Select automatic mode if manual mode is no longer required.
NO HDC, SLOW DOWN	The Hill Descent Control operating speed range of 0 - 21 mph (0 - 35 km/h) has been exceeded, or an attempt to select HDC has been made whilst the vehicle is exceeding the operating speed range.	Slow down to below 21 mph (35 km/h) to use or select HDC.

Message	Meaning	What to do?
OFFROAD MAX 30 MPH	Vehicle speed is exceeding 28 mph (45 km/h), while at off-road height.	Do not drive at speeds exceeding 30 mph (50 km/h) whilst at off-road height. Otherwise the vehicle will return to standard height.
PRE-HEATING	The vehicle's preheating system has been activated.	Deactivate the system if not required.
RELEASE PARKING BRAKE	The parking brake is applied and a drive gear is selected.	Release the parking brake.
SELECT NEUTRAL	You have attempted to change gear ranges without the gearbox being in NEUTRAL.	Select neutral in the main gearbox.
SLOW DOWN	Your current road speed is too high to perform a transfer box range change.	Slow the vehicle to the required speed before changing range.
SPEED LIMIT*	You are exceeding the set maximum speed limit.	Slow down to conform with the speed limit.
SPORT MODE	The transmission is in sport mode.	Select automatic mode if sport mode is no longer required.
STOP!ENGINE OILPRESS	Engine oil pressure is too low.	Stop the vehicle as soon as safety permits and switch off the engine. Check the oil level, top-up if necessary - if okay, consult your retailer before driving.
TAILGATE OPEN	The tailgate is open as the vehicle moves off from stationary for the first time.	Stop the vehicle as soon as safety permits and close the tailgate.
TRAILER MODE	A suspension height change request has been made whilst the vehicle is being used for towing. No change occurs.	Do not attempt to change suspension height when towing - the vehicle must remain at standard height.
TRANS FAILSAFE PROG	A malfunction has occurred in the transmission.	Drive carefully avoiding excessive 'revs' and consult your retailer at the earliest opportunity.
TRANSFERBOX NEUTRAL	Confirmation that neutral has been selected in the transfer box.	Remove fuse 37 if transfer neutral is no longer required.
TRANSMISS'N OVERHEAT	The transmission oil temperature is too high.	If the message persists, stop the vehicle as soon as safety permits and allow the gearbox to cool. Seek qualified assistance if the message resumes.

SERVICE INTERVAL INDICATOR

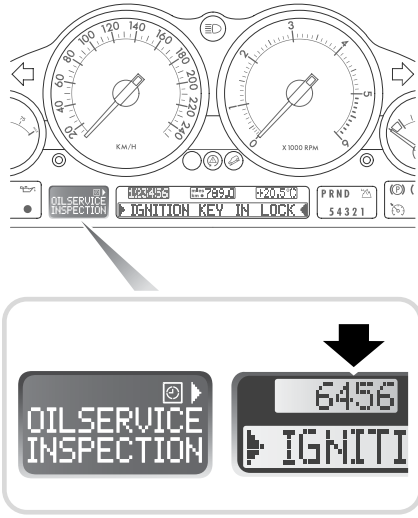

H3821

When the starter switch is turned to position ‘I’, a ‘countdown’ to when the next service is due appears in the total distance travelled display (arrowed in inset). A minus sign preceding the distance indicates that the service interval point has been exceeded and this is the distance by which it is overdue.

After approximately five seconds, the display reverts to show just the total distance travelled.

The mileage countdown is controlled by the engine management system and is adjusted to allow for driving style and conditions, to gauge when the appropriate service becomes necessary.

NOTE: *After the completion of each service, the dealer will reset the distance display to commence the countdown to the next service.*

GEAR SELECTOR DISPLAY

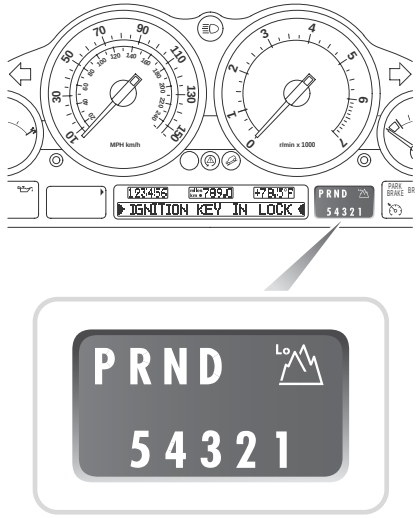

H4346

This shows the current gear lever position (‘P’, ‘R’, ‘N’ or ‘D’) and indicates when low range has been selected. In addition, the display indicates which gear has been selected when the gearbox is in manual mode (‘5’, ‘4’, ‘3’, ‘2’ or ‘1’).

The LOW range indicator (in the top right corner of the display) flashes whilst the transfer gearbox changes ranges and then illuminates constantly when low range has engaged. The range change will also be confirmed in the main message center.

WARNING LIGHTS

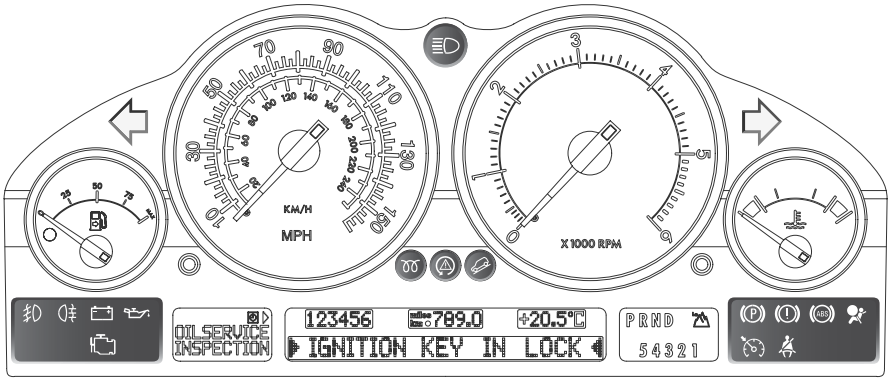

H4954

IMPORTANT INFORMATION
RED warning lights are of particular importance, their illumination indicates that a fault exists. If a RED warning light illuminates, stop the vehicle and review the specific instructions given in this section.

Rear fog guard light - YELLOW

Illuminates when the rear fog guard lights are switched on.

Front fog lights - GREEN

Illuminates when the front fog lights are switched on.

Battery charging - RED

The light illuminates as a bulb check when the starter switch is turned to position ‘II’ and extinguishes once the engine is running. If it remains on, or illuminates whilst driving, a fault is indicated. Seek qualified assistance urgently.

Low oil pressure - RED

The light illuminates as a bulb check when the starter switch is turned to position ‘II’ and extinguishes when the engine is started. If the light remains on, flashes on and off, or illuminates whilst driving, stop the vehicle as soon as safety permits and SWITCH OFF THE ENGINE IMMEDIATELY. Seek qualified assistance before driving. Always check the oil level when this light illuminates.

Service engine soon - AMBER

SERVICE ENGINE SOON

The engine management system on your Range Rover is controlled by a sophisticated engine control module which maintains optimum control of engine running and emission levels and monitors the operation of the sub-systems and components.

The 'Service Engine Soon' indicator illuminates as a system check when the starter switch is turned to position 'II' and should extinguish when the engine is started.

If an engine operation or emissions problem is registered by the engine control module when the vehicle is being operated, the 'Service Engine Soon' indicator will illuminate.

If 'Service Engine Soon' illuminates, and the vehicle drives normally:

Contact your Land Rover retailer to schedule a service appointment at your earliest convenience - YOU MAY STILL DRIVE THE VEHICLE.

If 'Service Engine Soon' flashes, and/or the vehicle does not drive normally:

Avoid high speeds and seek immediate assistance from your Land Rover retailer.

Parking brake system - RED

PARK BRAKE

The light illuminates for about 3 seconds as a bulb check when the starter switch is turned on. It also illuminates when the parking brake is applied with the starter switch in position 'II'.

The light should extinguish when the parking brake is fully released. If the light illuminates whilst driving, a fault with the parking brake system is indicated, seek qualified assistance before continuing.

Brake system - RED

BRAKE

This light shares its position and symbol with the emergency brake assist warning light and illuminates briefly as a bulb check when the starter switch is turned on (the light follows a amber-red-amber sequence).

The light should extinguish shortly after the starter switch is turned to position 'II'. If the light does not extinguish, or illuminates whilst driving, a fault with the brake systems is indicated. Stop the vehicle gently, as soon as safety permits and seek qualified assistance before continuing.

The light may be accompanied by the message 'CHECK BRAKE PADS' or 'CHECK BRAKE FLUID'. If the message 'CHECK BRAKE FLUID' is displayed, check the brake fluid level and top-up if necessary. If the light remains illuminated after the fluid is at the correct level, seek qualified assistance before continuing.

Emergency brake assist - AMBER

BRAKE

This light shares its position and symbol with the brake system warning light and illuminates briefly as a bulb check when the starter switch is turned to position 'II' (the light follows a amber-red-amber sequence).

If the light remains amber after starting, or illuminates whilst driving, a fault with the EBA system is indicated. Drive with care, avoiding heavy brake application, and seek qualified assistance urgently.

Anti-lock braking system - AMBER

The light illuminates as a bulb check when the starter switch is turned to position ‘II’. If the light remains on or illuminates whilst driving, a fault with the ABS system is indicated. Drive with care, avoiding heavy brake application, and seek qualified assistance urgently.

Airbag SRS - RED

The light illuminates when the starter switch is turned to position ‘II’ and extinguishes after about 4 seconds. If the light illuminates at any other time, the system is faulty - seek qualified assistance urgently.

Cruise control active - GREEN

Illuminates when cruise control is operating.

Seat belt - RED

The light illuminates when the starter switch is turned to position ‘II’ and extinguishes after approximately 6 seconds, even if the driver's seat belt remains unfastened. Always fasten your seat belt before driving.

Dynamic stability control (DSC) - AMBER

Illuminates briefly as a bulb check when the starter switch is turned to position ‘II’. The light also illuminates when the DSC switch is pressed, indicating that DSC has been switched off (but traction control is still active).

The light will flash when the system becomes active and will remain flashing until the system is no longer needed.

If the light illuminates constantly, and does not extinguish when the DSC switch is pressed, a fault has been detected in the system. If there is a fault, DSC will be inactive - drive with care and seek qualified assistance as soon as possible.

Hill descent control (HDC) ‘information’ - GREEN

Illuminates briefly as a bulb and system check when the starter switch is turned to position 'II' and also illuminates when HDC is selected.

If HDC is selected and the vehicle is within the operating speed range of up to 21 mph (35 km/h), the light will illuminate continuously.

If HDC is selected and the vehicle is driven faster than the operating speed range, the light will flash and the message ‘NO HDC - SLOW DOWN’ is displayed.

The light will also flash during HDC fade-out (see *‘HDC fade-out’, page 161* for further information).

If a fault with the HDC system occurs, HDC will fade-out and then deselect, or immediately deselect (depending on the type of fault and whether or not HDC is in operation). The green light will extinguish and the message ‘HDC INACTIVE’ will appear in the message center.

Headlight high beam - BLUE

Illuminates when the headlights are switched to high beam.

Direction indicators - GREEN

The left or right warning light flashes in time with the corresponding left or right direction indicator lights whenever they are operated. If the warning light fails to flash, or flashes very rapidly, this may indicate a bulb failure in one of the direction indicator lights.

If the hazard switch is pressed, both warning lights will flash in conjunction with the direction indicator lights.

AUDIBLE WARNINGS

The market specification will determine which of the following audible warnings are necessary to your vehicle.

Lights on reminder

If the lights are left on after the starter switch is turned off, a warning chime will sound when the driver's door is opened. The chime will cease as soon as the lights are switched off or when the driver's door is closed.

Electronic air suspension warnings

Automatic height changes are inhibited while in ‘crawl mode’ provided that the vehicle does not exceed 25 mph. If vehicle speed exceeds 20 mph, a warning chime will sound.

For further information, please refer to *‘Crawl mode’, page 165*.

Dynamic stability control (DSC) warning

If a fault with the DSC system is detected, a warning chime will sound once and the DSC warning light will illuminate. The vehicle may still be driven with care, but seek qualified assistance at the earliest opportunity.

Starter key reminder

In some markets, if the key is left in the starter switch while the driver's door is open, a warning will chime continuously. The chime stops as soon as the door is closed or the key is removed from the starter switch.

Seat belt reminder

If the driver's seat belt has not been fastened when the starter switch is turned on, a warning chime will sound (one second frequency). The chime operates in conjunction with the seat belt warning light and sounds for 6 seconds, or until the seat belt is fastened (whichever occurs first).

External temperature warning

If the external temperature drops to 37ºF (3ºC) or less, a warning chime sounds, accompanied by a warning in the message center. Take appropriate measures to defrost the vehicle and be aware that there may be ice on the roads.

MAIN LIGHT SWITCH

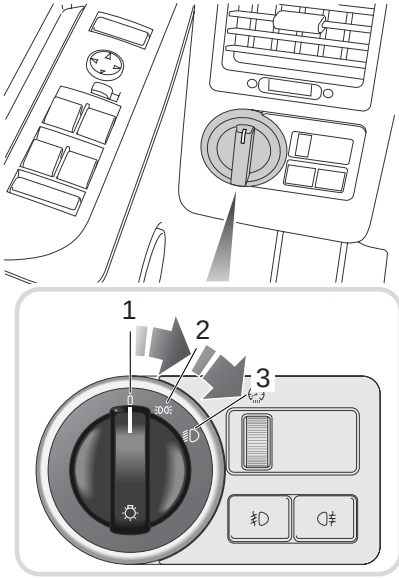

H3866

1. Lights off.
2. Side, tail and instrument panels lights on.
3. Headlights on.

Headlight courtesy delay
To illuminate the headlights for a short time after the vehicle is parked, turn the starter switch off with the headlights switched on (‘LIGHTS ON’ appears in the message center). Then, turn the headlight switch to the off position - the headlights will re illuminated for approximately 40 seconds after closing the driver’s door, before turning off automatically.

If necessary, the courtesy delay may be cancelled at any time during this period by turning the starter switch or the main light switch on and then off again.

Headlight courtesy delay can be disabled by a Land Rover retailer, if required. The headlight courtesy time delay period can also be adjusted by a Land Rover retailer, to suit your requirements.

Headlight high and normal beams

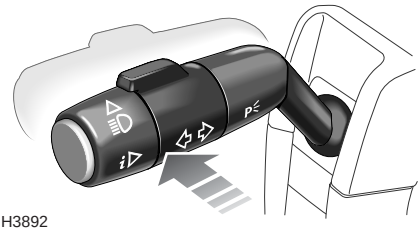

H3892

Push the lever away from the steering wheel to change headlights to high beam (BLUE warning light illuminates). Pull the lever back towards the steering wheel to change back to normal beam headlights.

To flash the headlights, pull the lever part way towards the steering wheel and release.

Daytime running lights*
In certain markets, with the main lighting switch turned off (position 1), the headlight low beams will illuminate as soon as the starter switch is turned to position ‘II’. The instrument panel illumination remains off.

Unless they are required or prohibited by law, daytime running lights can be disabled/enabled by a Land Rover retailer.

Parking lights
If required, the side and tail lights on the near or off-side can be left illuminated at a reduced output, when the vehicle is parked.

With the starter switch in position '0', move the lights and indicator stalk fully up (to illuminate the right hand sidelight and tail light) or fully down (to illuminate the left). Remove the starter key and lock the vehicle in the normal way - the lights will remain illuminated.

NOTE: *The lights remain on with a reduced power output, to help prevent inadvertently discharging the battery.*

DIRECTION INDICATORS

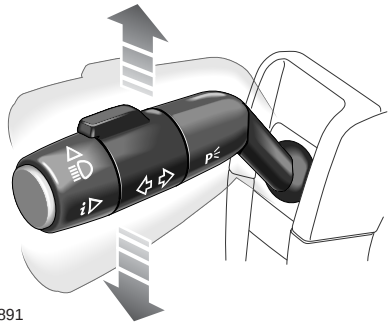
H3891

Move the lever DOWN to indicate a LEFT turn, and UP to indicate a RIGHT turn (the appropriate GREEN warning light on the instrument panel will flash in time with the direction indicators).

Hold the lever part-way up or down against spring pressure to indicate a lane change.

FOG LIGHTS

WARNING

Fog lights should ONLY be used when visibility is severely restricted - other road users could be dazzled in clear conditions.

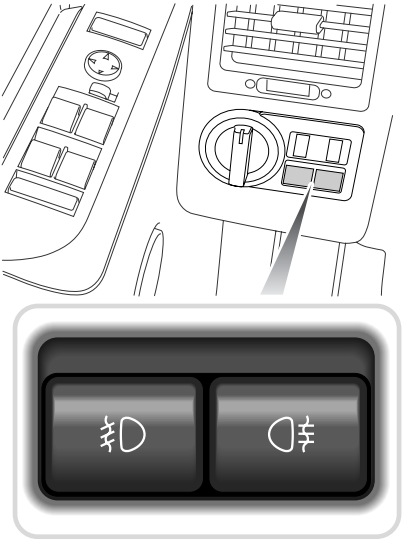
H3887

Front fog lights

Press to operate, press a second time to switch off (the warning light in the instrument panel illuminates when the fog lights are switched on).

The fog lights can be operated ONLY when the starter switch is at position 'II' and the side or headlights are also switched on. The fog lights extinguish automatically when the side lights or the starter switch is turned off and need to be reselected when the starter switch is turned back on.

DO remember to switch off as soon as visibility is clear.

Rear fog guard lights

Press to operate, press a second time to switch off (the indicator light in the switch illuminates when the fog guard lights are switched on). The rear fog guard lights illuminate ONLY when the starter switch is in position 'II' and the headlights (or front fog lights) are also switched on. Switching off the headlights, or front fog lights, or turning the starter switch to position '0' will automatically extinguish the rear fog guard lights too (the lights will not illuminate again unless switched on).

WARNING

ALWAYS remember to switch the fog guard lights off as soon as visibility permits; in clear conditions, fog guard lights can dazzle other road users!

HAZARD WARNING LIGHTS

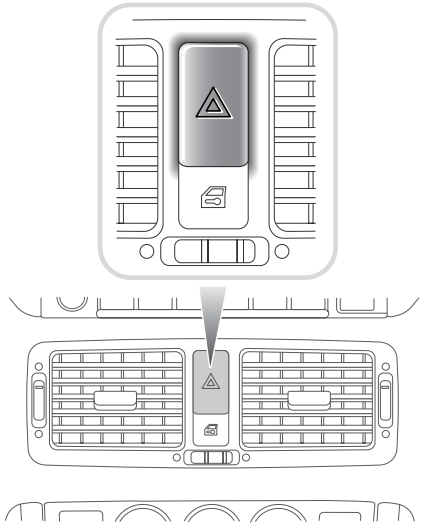

H3968

Press to operate; all the direction indicator lights (including those fitted to a trailer) will flash together. Use ONLY in an emergency to warn other road users when your stationary vehicle is causing an obstruction, or is in a hazardous situation. Remember to switch off before moving away.

OPERATING

The wipers and washers will only operate when the starter switch is turned to position ‘I’ or ‘II’.

IMPORTANT INFORMATION
• DO NOT operate the wipers on a dry windshield. • In freezing or very hot conditions, ensure that the blades are not frozen or stuck to the glass. • In winter, remove any snow or ice from around the arms and blades, including the wiped area of the windshield and the heater air intakes.

NOTE: *If the wiper blades have stuck to the glass, an electronic cut-out may temporarily prevent the wiper motor from operating. If this is the case, switch the wipers off, wait for 3 minutes (or turn the starter switch off and then on again) free them from the obstruction and then switch on again.*

WINDSHIELD WIPERS

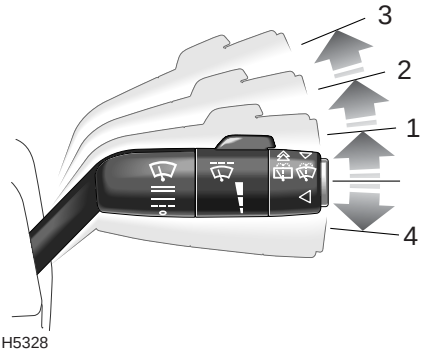

Rain sensor variable delay* or intermittent variable delay
Push the lever up to position 1.

Normal speed wipe
Push the lever up to position 2.

Fast speed wipe
Push the lever up to position 3.

Single wipe
Pull the lever down to poaition 4 and release immediately.

NOTE: *With the lever held down, the wipers will operate at normal speed until the lever is released.*

Intermittent variable delay

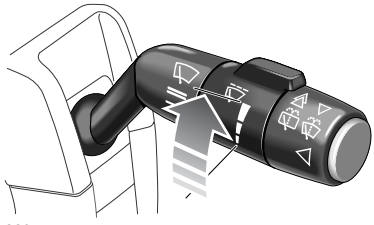

With the lever in position '1', rotate the switch clockwise to increase and anti-clockwise to decrease the frequency of the intermittent wipe.

Road speed sensor

The frequency of wiper operation is also adjusted automatically according to road speed. As the speed of the vehicle increases, the wiper frequency increases accordingly to help maintain optimum visibility. This feature is automatic and cannot be adjusted by the driver.

Speed sensitive wiper operation can be disabled by a Land Rover retailer.

Speed step-down *

If the vehicle comes to a halt with the wipers operating, the wipe frequency automatically reduces. If the wipers are set to high speed, they will switch to normal speed, if normal speed is selected, the wipers will switch to intermittent wipe. When the vehicle starts moving again, the original speed setting is restored automatically.

Rain sensor variable delay*

WARNING

Ensure that the rain sensor mode is deselected BEFORE entering an automatic car wash - otherwise, the wipers will operate during the car wash program and be damaged.

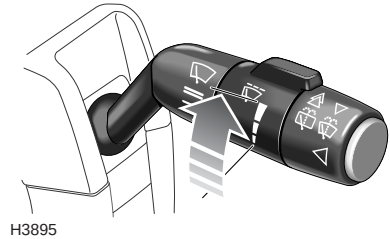

Your vehicle is equipped with an optical rain sensor fitted to the inside of the windshield, immediately to the front of the rear view mirror. The sensor is able to detect varying amounts of dirt or water on the outside of the shield. With the wiper switch in the first position, the variable delay adjusts automatically according to the information supplied by the rain sensor, to increase or decrease the frequency of wiper operation. You can increase or decrease the sensitivity of the rain sensor and therefore the frequency of wiper operation, by rotating the control - either clockwise to increase or anti-clockwise to decrease sensitivity.

If the sensor detects constant rain, the wipers automatically operate continuously at normal speed wipe.

WINDSHIELD WASHER

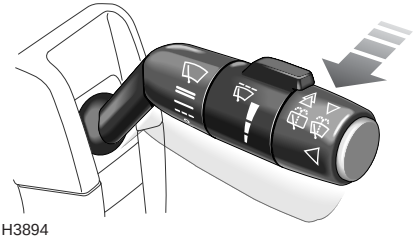

H3894

Pull the lever towards the steering wheel (for at least 0.5 seconds). The windshield wipers will operate in conjunction with the washers for as long as the lever is held in this position, the wipers continuing for a further 3 wipes after the lever is released.

H4056

This feature can also be activated by pressing the button on the end of the lever.

HEADLIGHT WASH/WIPE

With the starter switch on and the headlights illuminated, the headlight washers operate automatically in conjunction with the windshield washers as follows:

On the first operation of the windshield washers, the headlight wipers operate for 4 wipes, with the headlight washers operating for the first two of those wipes. Subsequently, the headlight washers and wipers operate every fifth time the windshield washers are operated (provided that at least 3 minutes has elapsed since the last headlight wash/wipe).

REAR WINDOW WIPER AND WASHER

Rear window wash/wipe

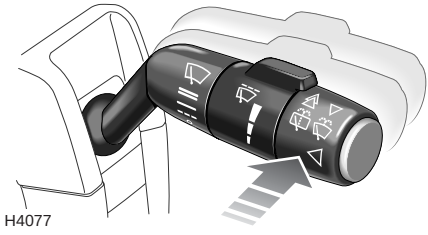

Push the lever forward to the first position, then forward again and hold against spring pressure for the required duration of window washing. The wiper operates automatically during washing and continues for a further 3 wipes after the switch is released.

Rear window wiper - Intermittent operation

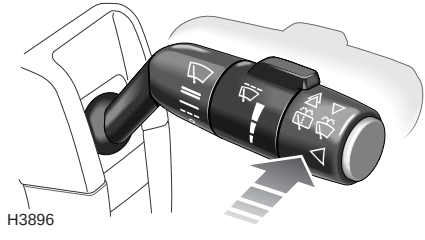

Push the lever forward to the first position to operate, the wiper operates intermittently until switched off.

NOTE: *If the rear wiper is switched on, whenever reverse gear is selected, it will operate continuously rather than intermittently.*

Rear window wiper - variable delay operation

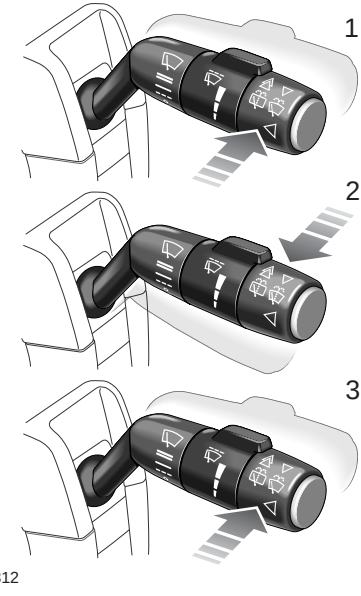

To set the variable wiper delay:

1. Push the lever forward to operate the rear wiper.
2. Immediately pull the lever back and wait for the desired delay period.
3. Push the lever forward again. The delay period is now set and the wiper will operate accordingly.

HORN

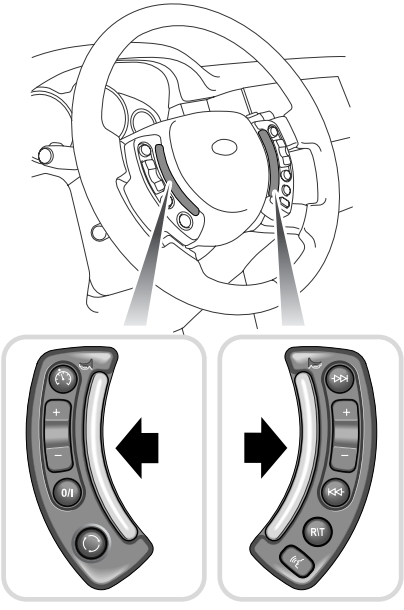

H4083

To operate, press either of the horn switches set into the steering wheel pad.

ELECTRIC WINDOWS

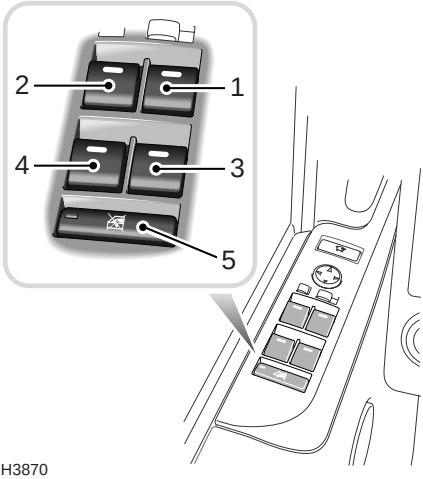

H3870

The switches on the driver's door operate the windows as follows:

1. Right hand front window.
2. Left hand front window.
3. Right hand rear window.
4. Left hand rear window.
5. Isolating switch for rear door window switches.

NOTE: *Rear windows can also be operated by the individual switches mounted on each rear door. The rear window switches will not operate if the isolation switch has been activated.*

Operating the windows

The electric windows can be operated when the starter switch is at position 'I' or 'II' and for up to 16 minutes after the starter switch is turned to position '0' (provided a front door is not opened).

Press lightly and hold the top of a switch to lower and lift lightly and hold the top of a switch to raise. The window will stop moving as soon as the switch is released.

WARNING

Accidental closing of an electrically operated window on fingers, hands or any vulnerable part of the body, can result in serious injury. Always observe the following precautions:

ALWAYS isolate the rear window switches when carrying children.

ENSURE children are kept clear whilst raising or lowering windows.

ENSURE that all adult passengers are familiar with the controls and the potential dangers of electrically operated windows.

DO NOT allow passengers to extend any part of their bodies through a window aperture while the vehicle is moving - injury from flying debris, branches of trees or other obstructions could occur.

It is recommended that the starter key is removed when leaving the vehicle.

'One touch' operation
By pressing firmly (and then releasing) the top of a switch, a window will open fully at a single touch. Window movement can be stopped at any time by BRIEFLY pressing the top of the switch.

To close the window at a single touch, firmly lift and release the top of a switch. Window movement can be stopped at any time by BRIEFLY lifting the top of the switch.

To stop window movement during a 'one-touch' open or close operation, operate the switch in the opposite direction to which the window is travelling.

Rear window isolation switch
Press once to isolate the window switches in the rear doors (the indicator light in the switch illuminates); press a second time to restore independent control.

WARNING

ALWAYS isolate the rear window switches when carrying children.

Anti-trap mechanism
If the anti-trap sensor detects an obstruction during window closing, the closing operation is interrupted and the window backs off. This is a safety feature designed to prevent inadvertent closing of a window on vulnerable parts of the body or other obstructions. Remove any obstruction and then close the window.

If, for any reason, it is required to override the anti-trap mechanism, lift and hold the relevant window switch until the window has closed.

SUNROOF OPERATION

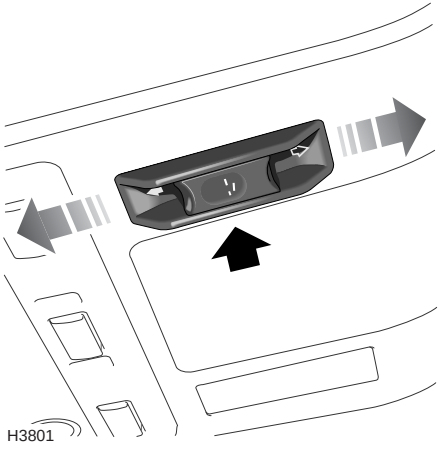

The electric sunroof can be operated when the starter switch is at position 'I' or 'II', and for up to 16 minutes after the starter switch is turned off (provided a front door is not opened).

- ***To tilt the roof:*** Press the center part of the switch - the rear edge of the roof automatically rises to the fully tilted position.
- ***To open the roof:*** Push the switch rearwards to the first position, the sunroof slides open until the switch is released - push the switch rearwards to the second position and release, to fully open the roof in one go.
- ***To close the roof:*** With the roof open or tilted, push the switch forwards to the first position - the roof closes until the switch is released.

  To fully close the roof in one go, push the switch forwards to the second position and release.

Anti-trap mechanism
If the roof encounters resistance during closing, the closing operation is interrupted and the roof opens slightly. This is a safety feature designed to prevent inadvertent closing of the roof on vulnerable parts of the body or other obstructions. Remove any obstruction and then close the roof.

WARNING

Accidental closure of a sunroof on fingers, hands or any vulnerable part of the body, can result in serious personal injury. Always observe the following precautions:

ENSURE passengers are kept clear and that the sunroof is not obstructed when opening or closing.

NEVER leave children alone in the vehicle as this could result in serious injury or death.

ENSURE that all adult passengers are familiar with the controls and the potential dangers of operating an electrically operated sunroof.

DO NOT allow passengers to extend any part of their bodies through the sunroof aperture while the vehicle is moving - injury from flying debris, branches of trees or other obstructions could occur.

ALWAYS close the roof when the vehicle is unattended.

Driving with the sunroof open
If, when driving with the sunroof open, unwanted drafts are experienced, open the front facia air vents, and increase the blower speed if necessary. DO NOT operate the air conditioning.

Sunroof blind

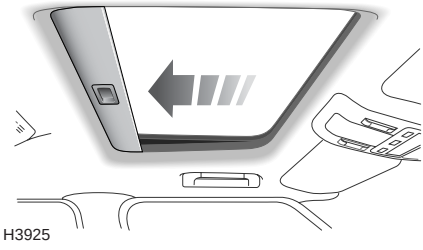

Pull the sunroof blind across the sunroof aperture to open and close.

NOTE: *The sunroof blind can be opened and closed manually, but will retract automatically when the sunroof is opened, and will open slightly if the roof is tilted.*

Operation after power supply interruption

If the vehicle power supply is interrupted, the sunroof will need to be recalibrated as follows:

- WIth the power supply reconnected, fully tilt the sunroof open.
- Continue to push the switch in the tilt position for approximately 20 seconds.

The sunroof can now be operated as normal.

VENTILATION

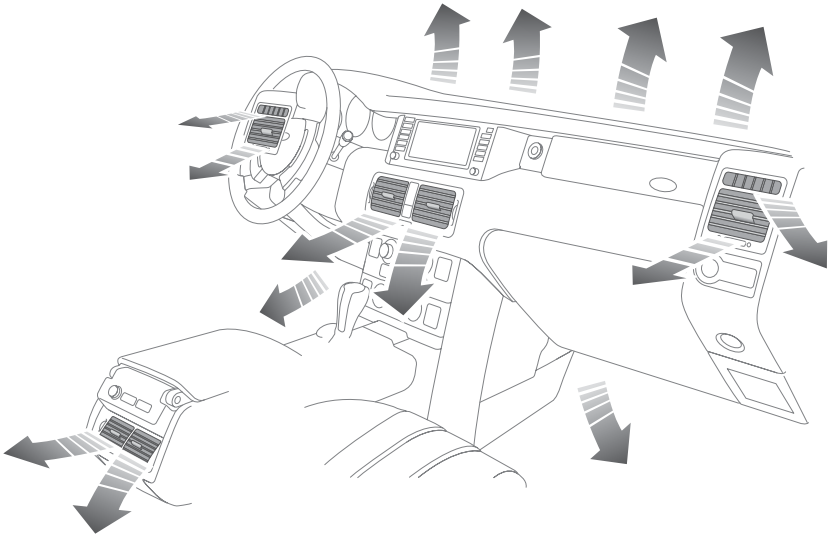

H4698

The ventilation system provides fresh or heated air to the interior of the vehicle from the air intake grille in front of the windshield.

NOTE: *Always keep the air intake grille clear of obstructions such as leaves, snow or ice.*

Air outlets are provided to the windshield, face and feet - the location of those vents is shown in the illustration above. The temperature of the air supplied to the vents is controlled by the heater.

Information concerning the operation of the heating and ventilation system, appears on the following pages.

Air Vents

The temperature of the air from all vents is controlled by the temperature settings of the heater.

Rotate the thumbwheel towards the green indicator to open, or the white indicator to close the vents. Direct the air flow by moving the control in the center of the louvres.

To ensure best ventilation and minimum noise, the vents should be fully open when the air conditioning air distribution control is set to face level.

Center foot/face level vents

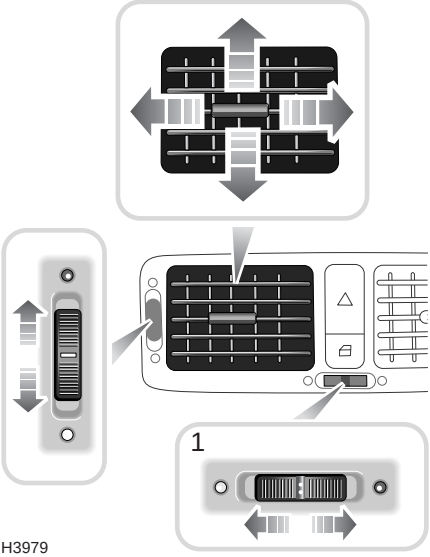

H3979

When the air conditioning air distribution control is set to either ‘Auto’ or ‘Face and Foot’ outlet, the temperature of the air emitted through the foot/face level vents can be finely adjusted to differentiate between foot and face temperature. Rotate the thumbwheel (1), towards the left (red indicator) for warm air and to the right (blue indicator) for cooler air.

Side face level vents

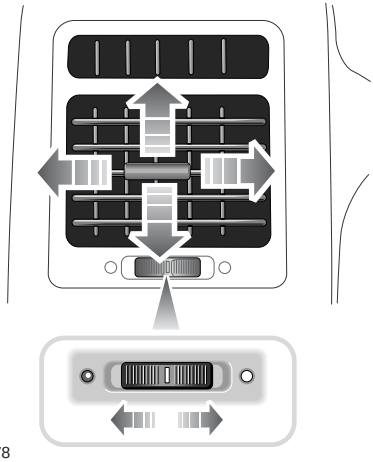

H3978

Rear vent controls

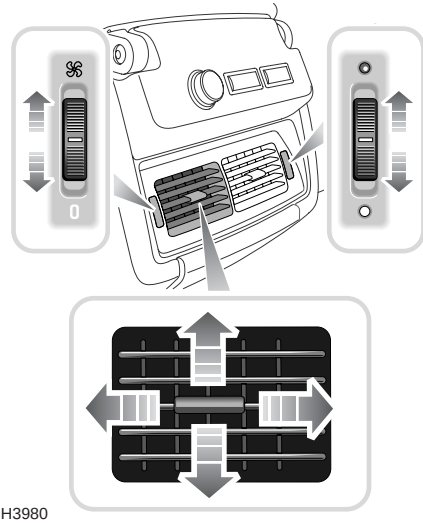

H3980

The left hand control operates the blower; rotate the thumbwheel upwards to increase the blower speed. The right hand control adjusts the temperature; rotate the thumbwheel upwards (red indicator) for warmer air, downwards (blue indicator) for cooler air.

NOTE: *The temperature set by the front occupants restricts the maximum level of warm air the rear passenger can select.*

COMFORT AIR CONDITIONING

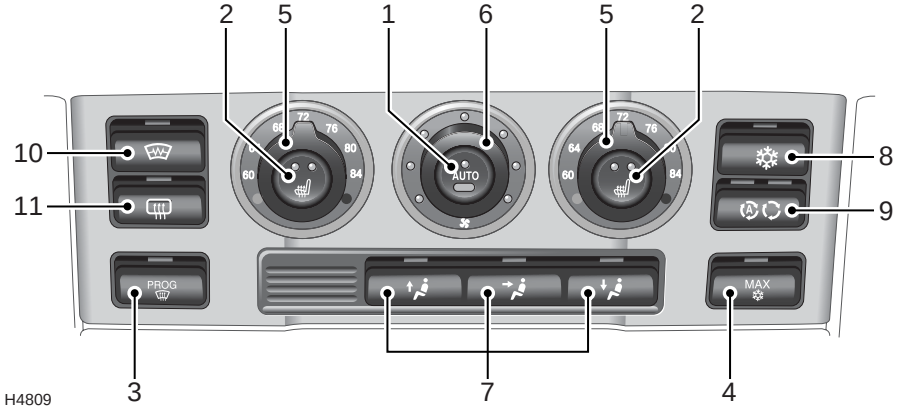

The air conditioning system features automatic temperature and air distribution control, which is programmed to maintain optimum levels of comfort within the vehicle in all but the most severe climatic conditions.

While the controls can be adjusted manually to satisfy individual requirements, allowing the system to function automatically (in Auto mode) is by far the simplest method of operation for the owner and is preferable in most operating conditions.

1. Auto mode

- Press 'AUTO' (1) for fully automatic operation (both indicator lights in the switch illuminate).
- Rotate the temperature controls (5) to select the required temperature.
- Let the automatic temperature control system do the rest.

In Auto mode, air conditioning, air distribution, blower speeds and air recirculation are adjusted automatically to achieve and then maintain the desired driving environment.

Both the air distribution and blower controls can be operated independently to override the automatic setting. In this case, the appropriate indicator light in the 'AUTO' switch extinguishes (the circular light represents the blower, the rectangular light represents air distribution). Press 'AUTO' again to re-establish automatic operation.

NOTE: *If the air distribution and blower controls are operated independently, the system may not be able to achieve or maintain the required temperature settings.*

2. Front seat heaters*

Press once to operate at a high level, press twice to heat the seats at a lower level. For further information concerning the operation of both front and rear seat heaters, please refer to *'SEAT HEATERS*', page 107*.

3. Defrost mode

If the windshield is misting or covered in ice, press to activate the automatic defrost programme; the system will immediately direct its output to achieve maximum windshield clearing by:

- setting the blower speed and temperature to maximum.
- distributing air flow to the windshield only.
- deactivating the rear blower.
- deactivating air recirculation.

In addition, the rear window and windshield heaters will be switched on (or their timed operating cycle will recommence if they are already switched on).

Press the button a second time (or select 'AUTO' or any air distribution control) to leave the Defrost mode.

4. Maximum air conditioning

This mode automatically activates the air conditioning and air recirculation, and sets the blower speed at maximum and the air distribution to the face level vents. This mode overrides the current temperature settings.

4. Park heating

After driving, it is possible to provide heat to the cabin by using residual heat from the engine - with the engine turned off. By pressing the MAX button, continued heating is available for up to 15 minutes.

5. Temperature controls

Rotate the controls to set the required temperature for the corresponding side of the passenger compartment (left hand switch for the left side of the vehicle, and right hand switch for the right side).

Temperatures above 82°F (28°C) and below 61°F (16°C) cannot be set.

The temperatures on the control surrounds are relative, target temperatures only and are not reflective of any specific temperature measured within the vehicle interior.

NOTE: *The system will not achieve temperatures on the passenger side of the vehicle that are more than 9°F (5°C) greater or less than the temperature set for the driver's side.*

6. Blower control

Rotate clockwise to increase and anti-clockwise to decrease airflow from the vents.

7. Air distribution control

Press the appropriate button to select the desired distribution setting:

Foot level vents

Face level vents

Windshield and side window vents

More than one setting can be selected at once, to get the desired distribution.

8. Air conditioning control

With the engine running, press the button to manually activate the air conditioning, or to switch off the air conditioning if it has been previously selected (manually or automatically).

9. Air recirculation

Air recirculation prohibits the entry of air from outside the vehicle, alternatively recirculating the air inside the vehicle instead. This is useful to prevent the entry of traffic fumes.

NOTE: *On some vehicles, there is also a remote air recirculation button on the steering wheel. This button is a simple on/off button and does not incorporate the automatic recirculation feature (see 'REMOTE AIR RECIRCULATION', page 108).*

Press the button once to activate automatic recirculation. This feature automatically activates air recirculation when sensors fitted to the vehicle detect high levels of air pollution, therefore preventing the ingress of fumes into the vehicle (in a traffic queue, for example).

Press the button a second time to activate air recirculation.

Press the button a third time to deactivate air recirculation.

Air recirculation also significantly influences the dehumidifying and cooling performance of the air-conditioning system. Therefore, in Auto mode, air recirculation is regulated automatically to enable the air-conditioning system to achieve its optimum performance.

NOTE: *Prolonged recirculation may cause the windows to mist.*

10. Heated windshield*

Press to operate, the indicator light in the switch will illuminate whenever the windshield heater is on.

11. Heated rear window

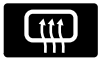

Press to operate; the indicator light in the switch illuminates whenever the window heater is on.

CAUTION: DO NOT stick labels over the heating elements on the rear window, and DO NOT scrape or use abrasive materials to clean the inside of the rear window.

USING YOUR HEATER

Fresh air enters the heater unit through the grille in front of the windshield and stale air is drawn out through vents in the rear of the vehicle.

The following examples of basic heater settings are intended as a general guide; the air distribution, temperature and blower controls can then be further adjusted to suit your comfort requirements. Always remember that full heating is not available until the engine has reached its normal operating temperature.

Maximum heating

Set the temperature control to maximum and the air conditioning air distribution control to 'AUTO', with the blower at the slowest speed (position 1) until the temperature gauge indicates that the engine is warming up - the blower speed can then be increased. Set the center face ventilation temperature control fully towards the red indicator.

Demisting/defrosting

Switch on the air conditioning and the windshield heaters, then set the temperature and blower controls to maximum. Set the air conditioning air distribution control to 'all air to windshield', to obtain the maximum flow of heated air from the windshield and side window vents. When defrosting, switching on air recirculation will help, but remember to switch off air recirculation as soon as defrosting has completed, to avoid windshield misting.

Maximum ventilation

Set the temperature control to your preferred interior temperature. Switch on the air conditioning and select air recirculation. Set the air distribution control set to 'Air to face vents'. Ensure the face level vents are open and set the center face vent temperature control fully towards the blue indicator. Adjust the blower speed to maximum.

Opening a window or the sunroof may improve ventilation. Remember; do not open a window or the sunroof, if the air conditioning is operating.

GENERAL NOTES

- For optimum operating efficiency, ensure all the air vents (including those in the rear of the vehicle) are open.
- For the automatic temperature control system to function efficiently, all windows (and the sunroof) should be closed, and the air intake vents free from ice, snow, leaves or other debris.
- In very humid conditions, slight windshield misting may be experienced when the air conditioning system is turned on. This is a natural occurrence on most automotive air conditioning systems. It is not a fault and misting will clear after a few seconds once the air conditioning system is operating.
- The air conditioning compressor will not function unless the engine is running.
- Surplus water produced by the dehumidifying process is expelled from the system via drain tubes beneath the vehicle. This may result in a small pool of water forming on the road when the vehicle is stationary and is not a cause for concern.

INDEPENDENT VENTILATION CONTROL

The independent ventilation control attains a more comfortable temperature in the passenger compartment prior to entry through use of the Timer Preset feature, or, while inside the vehicle by use of Direct Mode.

The ventilation feature operates without running the vehicle's engine.

It can be operated manually or programmed to switch on at a preset time.

Timer Preset mode

An electronic control unit checks for an ambient exterior temperature of 16°C before determining if ventilation is required.

If the temperature is above 16°C, the unit will activate the independent ventilation until the interior temperature matches the exterior ambient temperature.

The system will automatically shut down after 30 minutes. See the Audio and Navigation handbook or the In-Car Entertainment handbook for further details.

SEAT HEATERS*

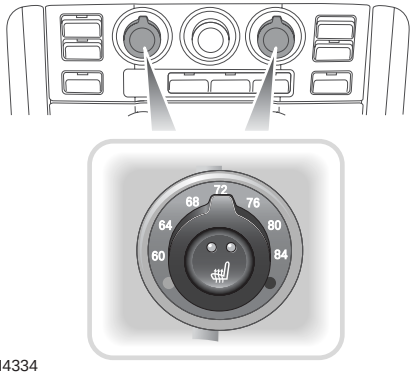

H4334

Front seat heaters

H4037

Rear seat heaters

With the starter switch turned on, the seat cushion and seat back can be heated at two different levels.

- Press once to operate at a high level (both indicator lights illuminate).
- Press twice to heat the seats at a lower level (right hand indicator light extinguishes).
- Press the switch a third time to turn off the heater manually (both indicator lights will extinguish).

The seat heaters are thermostatically controlled and will operate intermittently to maintain a predetermined temperature. The indicator lights in the switches will remain illuminated until the heaters are either manually turned off, or if the starter switch is turned off.

IMPORTANT INFORMATION
The seat heaters consume considerable power from the battery. For this reason, they should ONLY be operated while the engine is running.

REMOTE AIR RECIRCULATION

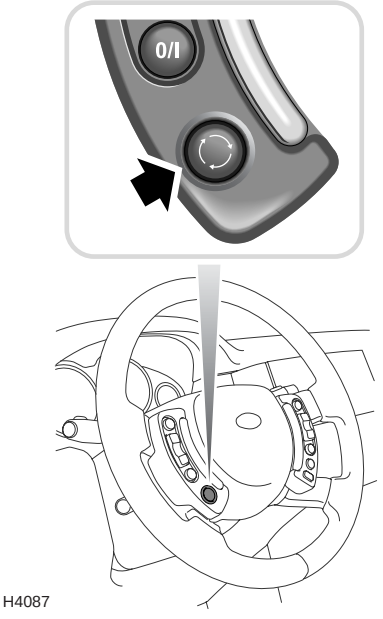

H4087

Press to turn air recirculation on or off. The indicator light in the main recirculation control will illuminate when air recirculation is active.

NOTE: *On vehicles fitted with a heated steering wheel, the remote air recirculation switch is not fitted.*

HEATED STEERING WHEEL*

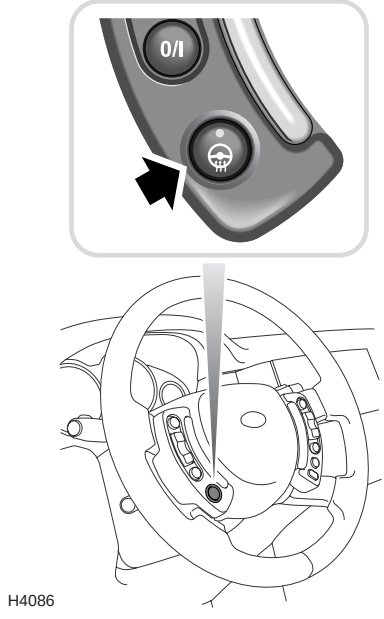

H4086

Press to activate the steering wheel heating elements. The heating elements are thermostatically controlled and operate intermittently (when switched on) to maintain a comfortable temperature. Press the switch again to manually deactivate the heater.

INTERIOR COURTESY LIGHTS & MAP LIGHTS

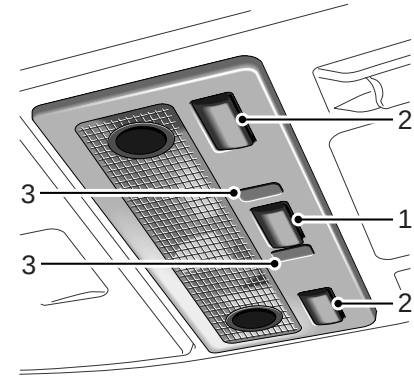

Front interior light and map lights illustrated

The interior light illuminates automatically whenever the vehicle is unlocked, when the starter switch is turned off (provided the sidelights have been on in the last 30 seconds), or when a door or taildoor is opened. The light remains illuminated for 20 seconds after the doors and taildoor are closed, or until the starter switch is turned on.

After driving, the interior lights will fade and then extinguish as soon as the vehicle is locked or when all the doors and tailgate are closed.

NOTE: *If a door is left open the lights will automatically extinguish after 16 minutes, to prevent battery drain.*

To turn the light on and off manually, briefly press switch 1.

To turn off the automatic illumination feature (i.e. when a door is opened), press and hold switch 1 for 3 seconds. Repeat to restore the automatic illumination feature.

Vehicle finder

When returning to your vehicle, if you press the lock button on the remote handset, the interior lights will come on for 8 seconds to assist you in locating your vehicle in a busy car park.

Map light operation

Press the relevant map light switch (2) to turn on and off. If a map light is left on, it will extinguish after 16 minutes to prevent battery drain.

LOW LEVEL NIGHT TIME ILLUMINATION

With the main lighting switch turned to sidelights or headlights, the interior lights provide very low level illumination using the LEDs (3), in conjunction with the optional door bin and door handle lights. The level of illumination can be adjusted using the instrument illumination dimmer switch.

Low level lighting provides very limited illumination for the interior of the vehicle, whilst the vehicle is being driven, without affecting the driver's night vision.

GLOVEBOX LIGHT

Illuminates automatically whenever the glovebox is opened and extinguishes when the glovebox is closed. If the glovebox is left open, the light will extinguish automatically after 16 minutes, to prevent battery drain.

APPROACH LIGHTS

A light, mounted in the bottom of each of the exterior mirror housings, illuminates for 20 seconds when the vehicle is unlocked. These lights illuminate the approach to the vehicle.

CLOCK

Setting the time

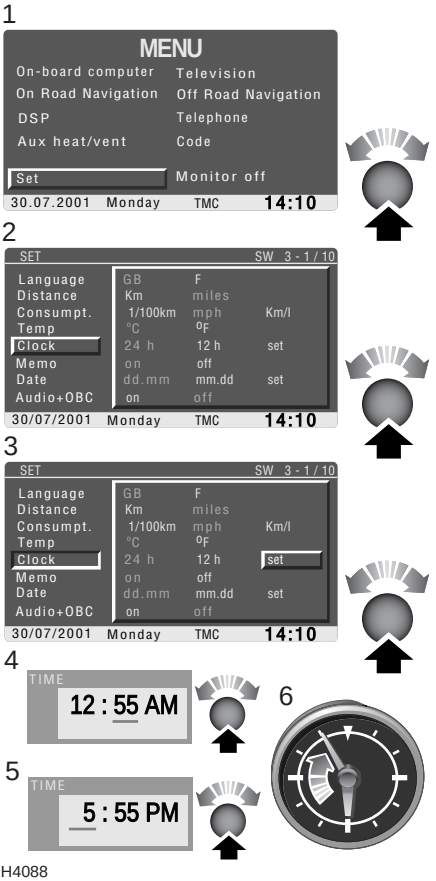

H4088

To set the time, firstly access the main menu on the navigation display, and then follow the process below:

1. Using the rotary select control, highlight and then press to select ‘Set’.
2. Again using the rotary select control, highlight and select ‘Clock’ from the ‘Set’ menu.
3. On the ‘Clock’ line, highlight and select ‘set’.
4. The current time setting appears in the display, with a green line below the minutes. Rotate the select control to adjust the minutes setting, press to confirm.
5. The green line will now appear below the hour. Rotate the select control to adjust the hour to the correct time, the press to confirm.
6. The time will be changed in the navigation system display and the analogue clock in the facia will automatically adjust to the new time.

Using the clock

The analogue clock display illuminates constantly and dims automatically for night time viewing, when the side lights are illuminated. The dimming level can be adjusted using the instrument panel dimmer switch.

CIGAR LIGHTER

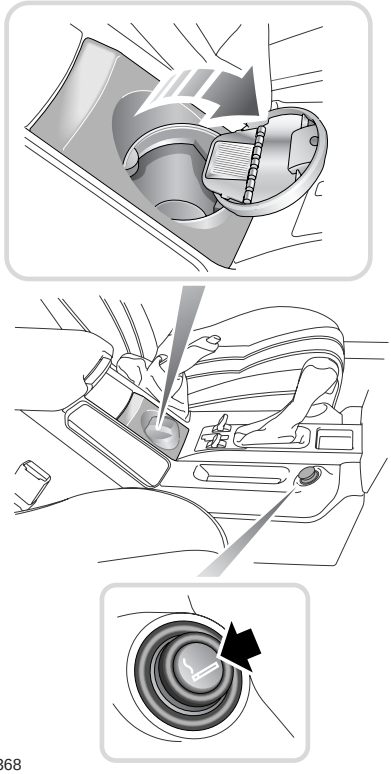

H4368

With the starter switch turned on, press the lighter in (solid arrow) to heat up. When it has reached the correct temperature it will partially eject and can then be withdrawn for use.

- ONLY hold the cigar lighter by the handle.
- DO NOT plug accessories into the cigar lighter socket unless they are approved by Land Rover.

NOTE: *The cigar lighter socket remains powered with the ignition switched off. Battery drain could occur if accessories are left plugged in when leaving the vehicle parked.*

ASHTRAYS

WARNING

DO NOT use the ashtrays for disposing of waste paper or other combustible items.

Front

Pull back the top edge of the ashtray cover to open (top arrow, left).

To remove the ashtray, lift and twist upwards. Removing the ashtray offers the option to use the ashtray support frame as a cupholder. When replacing the ashtray, do not force it into the cupholder.

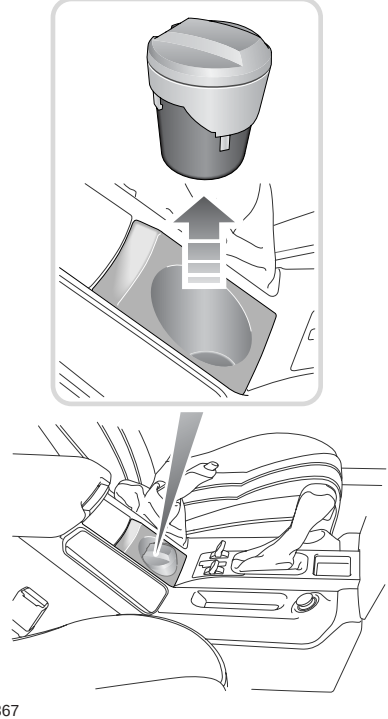

H4367

Rear

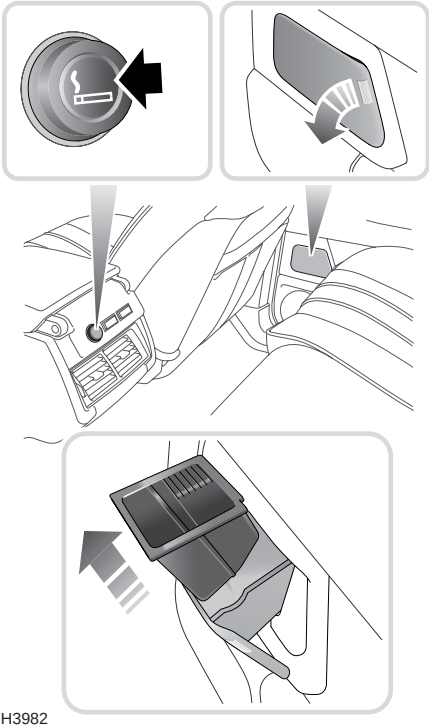

H3982

The rear ashtrays are set into the rear doors - pull where arrowed to open. To remove for emptying, open the ashtray and pull the inner compartment upwards.

The rear cigar lighter is incorporated in the rear of the cubby box, between the front seats. Operation of the rear cigar lighter is the same as that of the front cigar lighter.

NOTE: The cigar lighter socket remain powered with the ignition switched off. Battery drain could occur if accessories are left plugged in when leaving the vehicle parked.

AUXILIARY POWER SOCKETS

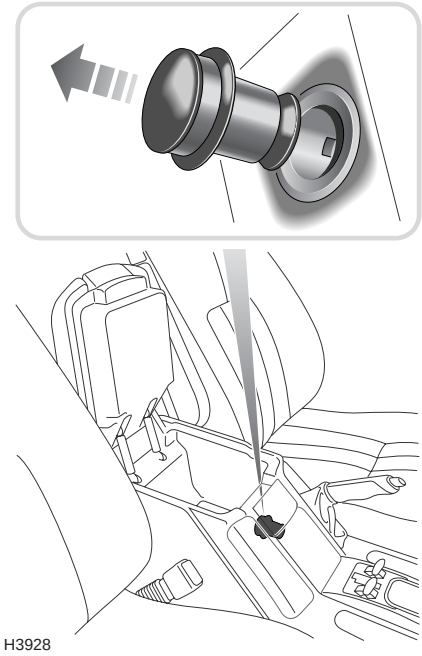

Cubby box power socket

An auxiliary power socket is mounted in the cubby box, between the front seats.

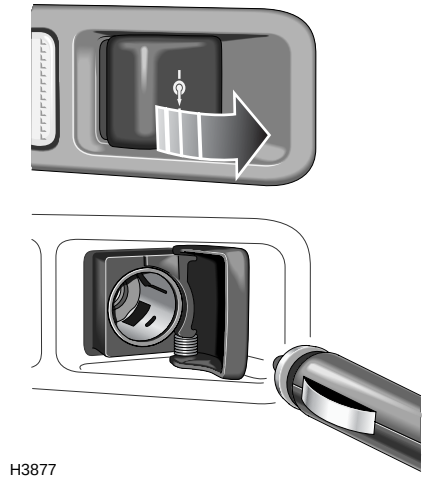

Rear loadspace power socket

A second power socket is located on the right hand side of the rear loadspace area.

Using a power socket

The power sockets can be used to power Land Rover approved accessories that use a maximum of 180 watts.

Always run the engine during prolonged use of electrical accessories, otherwise the battery may become discharged.

NOTE: Auxiliary power sockets remain powered with the ignition switched off. Battery drain could occur if accessories are left plugged in when leaving the vehicle parked.

CAUTION: NEVER plug non-approved accessories into a power socket - damage to the vehicle's electrical system could occur.

SUNGLASSES HOLDER

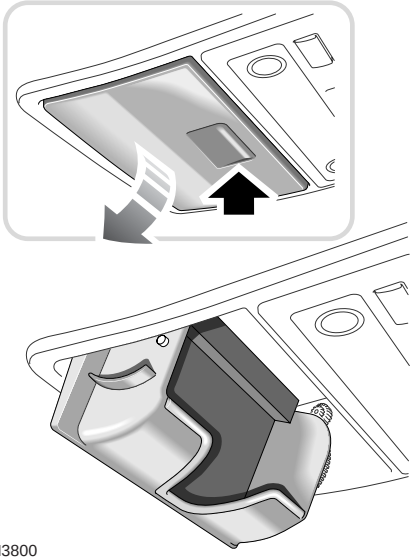

H3800

Press where arrowed (in inset) to open.

CUP HOLDERS

WARNING

The driver should not drink and should not use the cup holder while driving.

Retractable cup holders should be kept closed when not in use.

DO NOT place anything other than suitable drink containers in the cup holder, because such items may be thrown about in the compartment and possibly injure occupants in the event of an accident or emergency manoeuver.

Do not carry open-top drink containers in the cup holders while the vehicle is in motion; a spilled hot drink could cause personal injury. Spilled drinks can also damage upholstery, carpeting and electrical components.

Use only for soft containers. DO NOT use to hold cups made of glass, china or hard plastic, as these may cause injury in the event of an accident or emergency manoeuver. Unopened, sealed containers (drinks cans, for example) are hard objects and may also cause injury.

Driver's

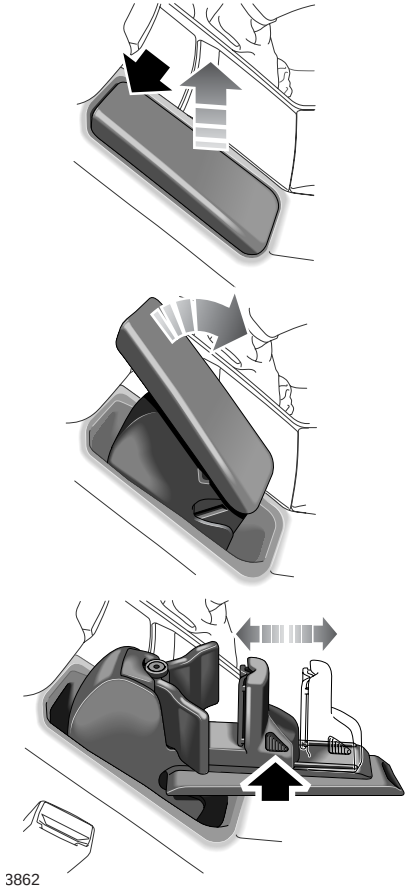

3862

Push the top of the cover to open (upper solid arrow). Push the cover forwards to open the cup holder. Press the catch (lower solid arrow) and slide the cup holder clamp to adjust the aperture to suit the size of the cup.

NOTE: *The clamp has to be fully closed before the cup holder can be folded back into the center console.*

Large cup holder

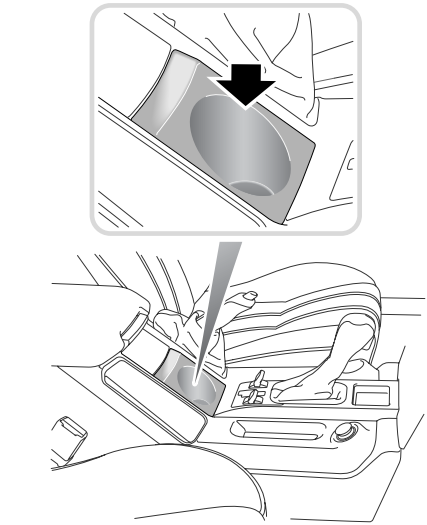

H4366

Alongside the driver's cup holder is a holder suitable for large drinks containers.

Front passenger's*

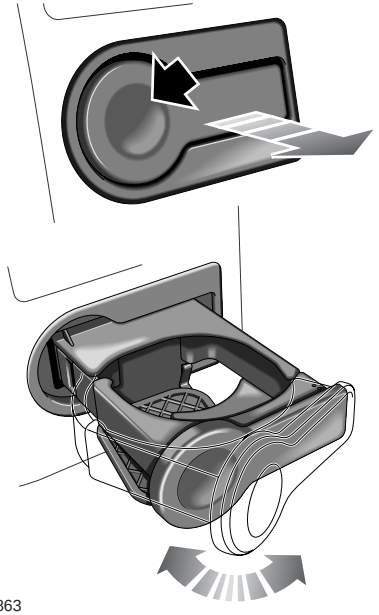

H3863

Press to open (solid arrow). When the holder is open, the leading edge can be pivoted out (as lower illustration) to adjust the aperture to suit the size of the cup. Push the cup holder in to close.

Rear passenger's

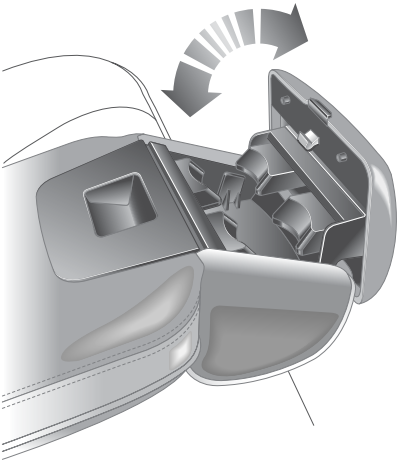

H3936

With the armrest folded down, depress the release catch and fold out the double cup holder (mounted in the back of the center seat headrest).

CUBBY BOX

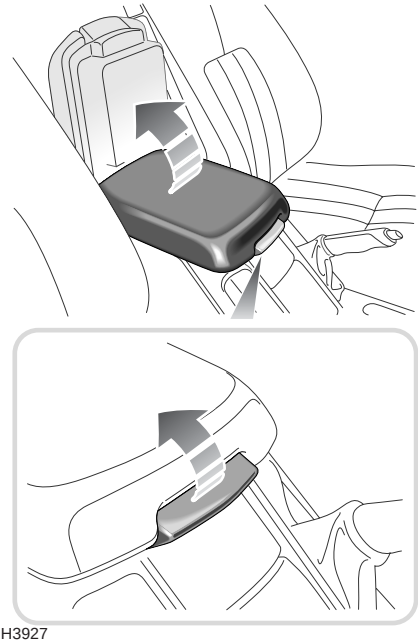

H3927

Lift the catch at the front of the cubby box lid to access the main cubby box.

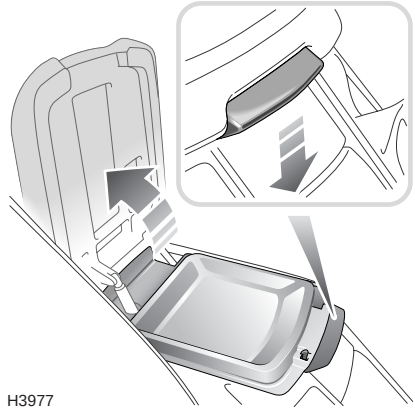

H3977

Press down on the catch and lift up the main lid of the cubby box to access the trinket tray.

SUN VISOR

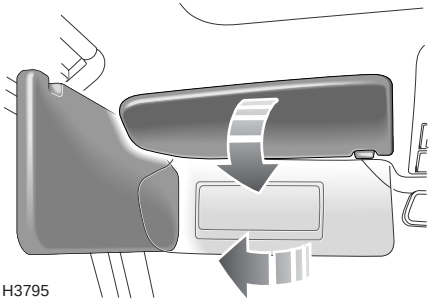
H3795

Pivot the sun visor downward to reduce sun glare through the windshield.
If required, the visor can then be pivoted towards the side window to reduce sun glare from that side of the vehicle.

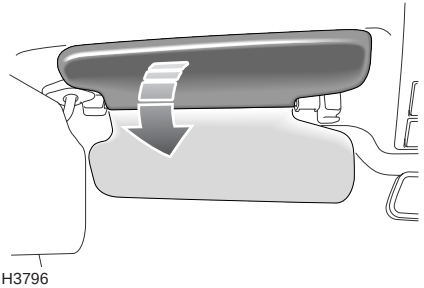
H3796

A secondary visor is located beneath the main visor and can be used as required.

SUN VISOR VANITY MIRROR ILLUMINATION

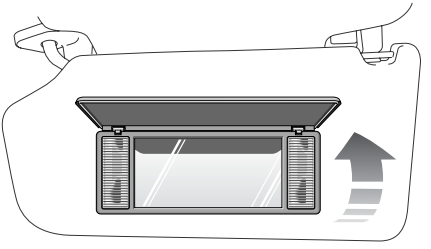
H3797

Pivot the sun visor downward and raise the cover on the vanity mirror to illuminate the mirror. Close the cover to extinguish the lights. If the cover is left open, the lights will extinguish automatically after 16 minutes to prevent battery drain.

INTERIOR REAR-VIEW MIRROR

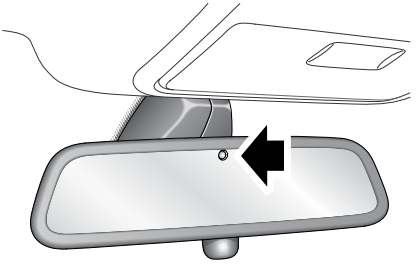
H3921

The rear view mirror is equipped with an automatic dipping function which operates whenever the starter switch is turned to position ‘II’. When powered, the light sensor (arrowed) detects excessive light and automatically dips the mirror, to reduce glare from the headlights of following vehicles in dark or low light conditions.

GLOVEBOX

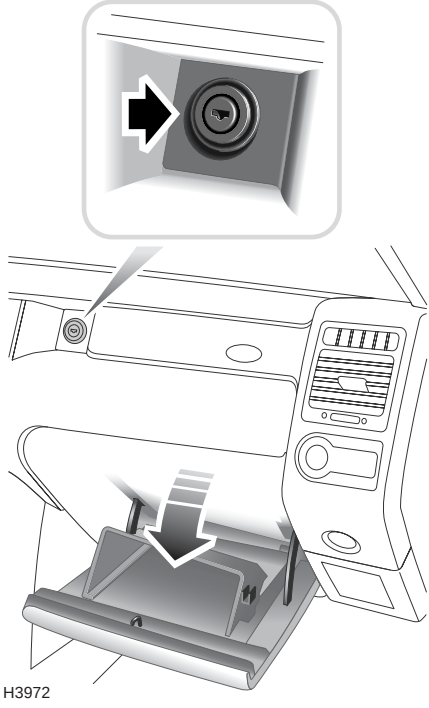

H3972

Press the release button (arrowed in inset) to open.

For added security, the starter key can be used to lock the glovebox.

LUGGAGE ANCHOR POINTS

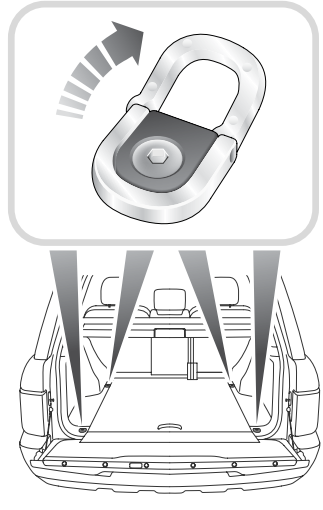

H4185

Four fixing points are provided in the rear loadspace floor, to assist in safely securing large items of luggage. Land Rover provide a range of approved luggage retention accessories.

WARNING

DO NOT carry unsecured equipment, tools or luggage, which could move and cause personal injury in the event of an accident or emergency manoeuver either on or off-road.

REAR LOADSPACE ACCESS HATCH

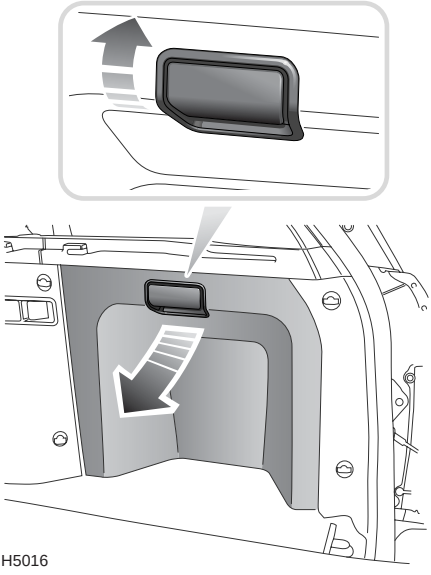

The access hatch is located on the right-hand side of the rear loadspace and provides access to the warning triangle, the rear loadspace fuse box and the emergency fuel filler flap release.

Lift the catch (upper inset) and pull the hatch away from the side of the vehicle.

When refitting the hatch, ensure that it is securely and correctly fitted, before driving.

REAR LOADSPACE STOWAGE AREAS

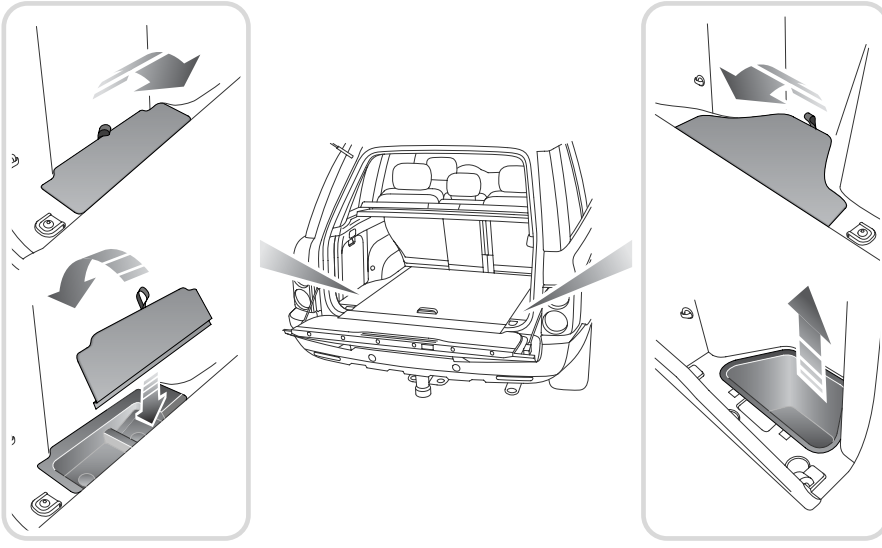

H4232

Hidden trinket tray
On the left-hand side of the loadspace, a small covered trinket tray is provided, to store smaller items in a concealed area. Pull up the tab to open the tray cover.

When replacing the cover, fit the right-hand edge first.

Removable stowage box*
On the right-hand side of the loadspace, a removable box is fitted, beneath the loadspace floor. Pull up the tab to open the box cover. Pull the box out to remove.

LOADSPACE COVER

Operating the loadspace cover

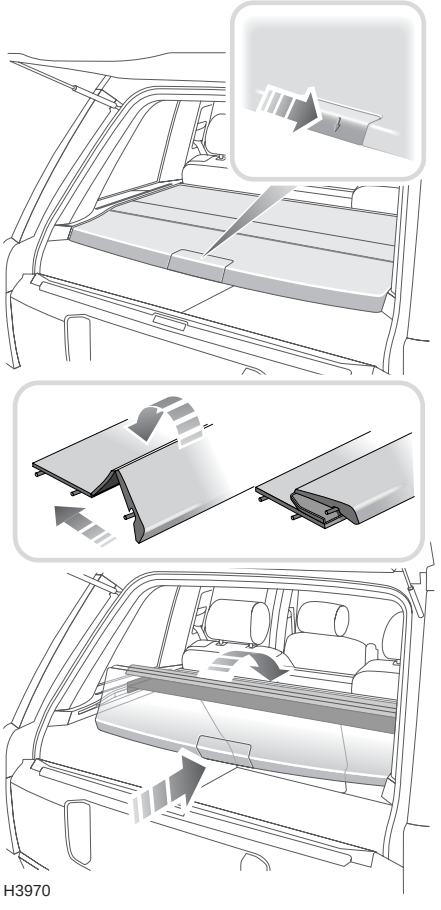

Push firmly downwards and forwards on the center of the rear edge of the cover (where arrowed in the upper inset), then lift and fold forwards.

WARNING

DO NOT carry loose items of luggage on top of the loadspace cover - these may obscure vision and could become dangerous projectiles in the event of a sudden stop or collision.

All equipment, luggage or tools carried in the loadspace should be secured to minimise the risk of injury to the driver and passengers in the event of an accident or emergency manoeuver.

Folding the loadspace cover from inside the vehicle

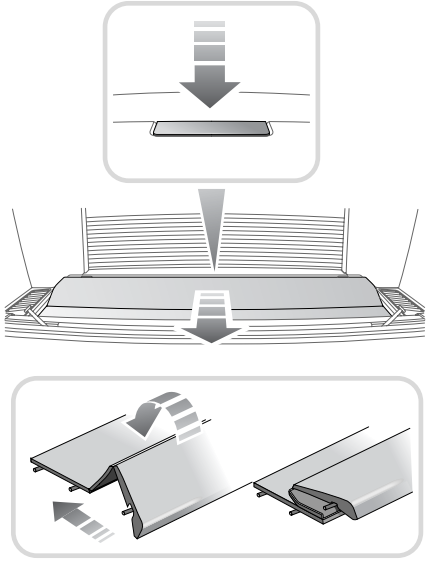

H4051

If it is necessary to fold the loadspace cover from inside the vehicle (to access the emergency tailgate release lever, for example), remove the rear head restraints to improve access to the loadspace. From the rear seats, push firmly down on the center rear edge of the cover (see upper inset), while pulling the cover towards the rear seats. The cover folds as shown in the lower inset.

Fitting the loadspace cover

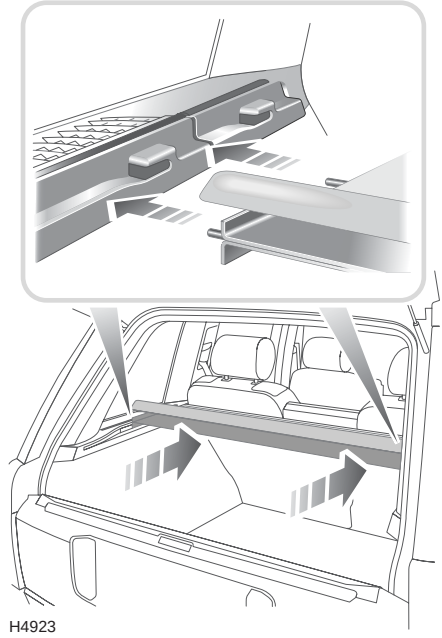

H4923

Place the loadspace cover in position, ensuring that the two locating pins on each side rest on the slides just rearwards of the sockets.

Press firmly forwards to engage and lock the pins in the sockets.

Removing the loadspace cover

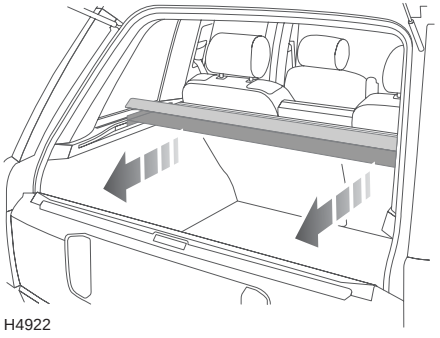

With the cover folded, pull the whole assembly rearwards to disconnect the locating pins and withdraw the loadspace cover carefully from the vehicle.

WARNING

DO NOT store the loadspace cover loose in the vehicle.

RADIO AERIAL

The aerial is etched onto the surface of the glass of the left hand rear side window.

No maintenance is possible, however it is important to ensure that the interior surface of the glass is protected from possible damage caused by contact with hard objects or from the injurious effects of abrasive cleaners.

RADIO REMOTE CONTROLS

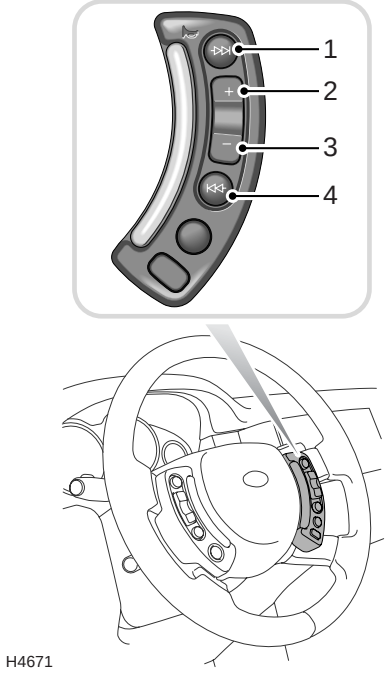

1. Search forward/ track select control
Press to change to the next radio station on the waveband.

During tape or CD play, press the control to move forward to the next track on the tape or disc. Operate the control repeatedly to move forward through several tracks at a time.

2. Volume increase control
Press to increase playback volume.

3. Volume decrease control
Press to decrease playback volume.

4. Search backward/track select control
Press to change to the previous radio station on the selected waveband.

During tape or CD play, press the control to move backward to the beginning of the current track on the tape or disc. Operate the control repeatedly to move backwards through several tracks at a time.

NOTE: The integrated phone buttons on the steering wheel are part of a feature not available on the North American specification 2003 model year range Rover.

IN-CAR ENTERTAINMENT

Audio system
Full operating instructions for any audio equipment fitted as standard to your vehicle are contained in the *'Audio & Navigation'* handbook.

CD autochanger*
The CD autochanger is located in the glovebox. Full operating instructions are contained in the *'Audio & Navigation'* handbook.

WARNING

DO NOT insert or eject the magazine while driving.

HOMELINK® TRANSMITTER*

The Land Rover HomeLink® Universal Transmitter is built into the underside of the rear view mirror and provides a convenient way to replace up to three hand-held transmitters with a single built-in device. This innovative feature will learn the radio frequency codes of most current transmitters to operate garage doors and gates. With the available accessory package, the HomeLink® Transmitter can also control home or office lighting and security systems. For reliability, the HomeLink® Transmitter is powered by your vehicle's battery and charging system.

Precautions

When programming your HomeLink® Transmitter, you will be operating the garage door or gate. Be sure that people and objects are out of the way, to prevent potential harm or damage.

WARNING

Do not use this HomeLink® Transmitter with any garage door that lacks safety 'stop' and 'reverse' features, as required by federal safety standard (this includes any garage or door opener model manufactured before April 1, 1982). A garage door opener which cannot 'detect' an object in the path of a closing door and then automatically 'stop' and 'reverse' the door, does not meet current federal safety standards. Using a garage door opener without these features increase the risk of serious injury or death. For more information on this matter, call toll-free: 1-800-355-3515.

Programming

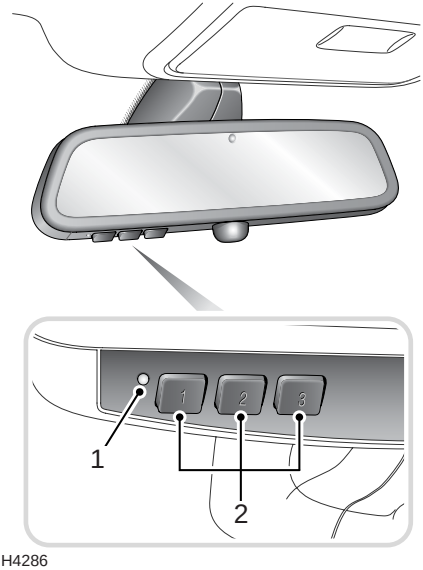

H4286

If after repeated attempts you do not successfully program the HomeLink® Transmitter to learn the signal of the hand-held transmitter, call toll-free for customer assistance: 1-800-355-3515.

1. If you have previously programmed your HomeLink® Transmitter, proceed to step 2. Otherwise, hold down the two outside buttons (2) on the HomeLink® Transmitter until the amber light begins to flash. Release both buttons.
2. Decide which one of the three channels you want to program.
3. Hold the end of your hand-held transmitter against the HomeLink® Transmitter (underside of the mirror) so that you can still see the amber light (1).

4. Using both hands, push the hand-held transmitter button and the desired button (2) on the HomeLink® Transmitter. Continue to press both buttons through step 5.
5. Hold down both buttons until you see the amber light on the Land Rover HomeLink® Transmitter flash, first slowly and then rapidly. It indicates that you have successfully programmed the HomeLink® Transmitter to learn the new frequency signal. Release both buttons once the rapid flashing begins.

Operating the Land Rover HomeLink® Transmitter

Once it is programmed, the HomeLink® Transmitter can be used in place of your hand-held transmitter(s). To operate, simply press the appropriate button on the HomeLink® Transmitter. The amber light comes on while the signal is being transmitted.

NOTE: *If your hand-held transmitter appears to program the HomeLink® Transmitter, but does not open your garage door and, if your garage door was manufactured after 1995, your garage door opener may have a 'code protected' or 'rolling code' feature.*

A 'rolling code' type of system will change the 'code' of your garage door opener every time you open or close your garage door.

To determine if you have one of these systems, depress the button on your HomeLink® Transmitter that you programmed. If the amber light on the HomeLink® Transmitter flashes rapidly for 1-2 seconds, then turns solid, your garage door opener has a rolling code system.

Training a garage door opener equipped with 'rolling codes'

To train your 'rolling code' garage door opener to operate from your HomeLink® Transmitter, follow these steps:

1. Program your hand-held transmitter to the HomeLink® Transmitter by following the procedures outlined in *'Programming', page 126* (if you already completed this programming, proceed to the next instruction).
2. Train your garage door opener receiver to recognize your HomeLink® Transmitter: (your garage door opener receiver will learn to recognize the HomeLink® Transmitter by following the same process used to train the hand-held transmitter)

   a) Remove the cover panel from your garage door opener receiver (the receiver should be located by the garage door motor).

   b) Locate the training button on the garage door opener receiver. The exact location and color of the button may vary by garage door opener brand. If you have difficulty locating the training button, reference your garage door opener manual, or call 1-800-355-3515.

   c) Press the training button on the garage door opener receiver for 1-2 seconds.

   d) Return to the HomeLink® Transmitter in the vehicle and depress the programmed HomeLink® Transmitter button for the duration of the rapid flash of the HomeLink®' amber light, (1-2 seconds). Release the button and depress the button to confirm that the HomeLink® Transmitter has been trained to the receiver.

e) Your garage door opener should now recognize your HomeLink® Transmitter. You may use either your HomeLink® Transmitter or your original hand-held transmitter to open your garage door.

If after following these suggestions you still have difficulties programming your HomeLink® Transmitter, call toll-free for customer assistance: 1-800-355-3515.

Erasing channels

To erase all three programmed channels, hold down the two outside buttons until the amber light begins to flash, then release both buttons. Individual channels cannot be erased, but can be reprogrammed using the procedures for programming the HomeLink® Transmitter (steps 2 through 5).

NOTE: *Be sure to retain your original transmitter for future programming procedures (i.e. new vehicle purchase).*

When selling your vehicle, be sure to erase all channels on the HomeLink® Transmitter that you programmed.

Accessories

Accessories for your HomeLink® Transmitter are available from the manufacturer of the device. If you would like additional information or would like to purchase other accessories such as home lighting or security products that can be operated by the HomeLink® Transmitter, please call the toll-free: 1-800-355-3515.

IMPORTANT INFORMATION
The transmitter has been tested and complies with FCC rules part 15 and DOC/MDC rules. Changes or modifications not expressly approved by the party responsible for compliance could void the user's authority to operate the device. Operation is subject to the following two conditions: **1.** This device may not cause harmful interference: and **2.** this device must accept any interference that may be received, including interference that may cause undesired operation.
DOC: ISTC 1763K1313 Prince MODEL/FCC ID: C82 V67690

HomeLink® is a registered trademark owned by the Prince Corporation, Holland. Michigan.

Driving & Operating

Starting & Driving

STEERING COLUMN LOCK 131
STARTER SWITCH. 131
STARTING 132
DRIVING 133
FUEL ECONOMY 134
AUXILIARY EQUIPMENT 135
EMISSION CONTROL SYSTEM 135

Catalytic Converter

CATALYTIC CONVERTER. 136

Fuel Filling

GAS STATION SAFETY. 138
FUEL FILLER 138
TYPE OF FUEL 139
FUEL FILLING 140
EMPTY FUEL TANK 140
FUEL FILLER FLAP EMERGENCY RELEASE. . . . 141

Park Distance Control

USING PARK DISTANCE CONTROL (PDC) 142

Automatic Transmission

GEAR SELECTOR. 144
GEAR SELECTOR LEVER 144
MANUAL CommandShift™
GEAR SELECTION 147
USING AN AUTOMATIC GEARBOX 148
ELECTRONICALLY SELECTED
AUTOMATIC MODES 149

Transfer Gearbox

TRANSFER GEAR SWITCH 150
USING THE TRANSFER GEARBOX. 150

Cruise Control

CRUISE CONTROL. 152

Brakes

FOOT BRAKE 154
ANTI-LOCK BRAKES 155
PARKING BRAKE 157

Dynamic Stability & Traction Control

DYNAMIC STABILITY CONTROL (DSC) 158
ELECTRONIC TRACTION CONTROL (ETC) 159

Hill Descent Control

HILL DESCENT CONTROL. 160

Electronic Air Suspension

ELECTRONIC AIR SUSPENSION (EAS). 162
MANUAL OPERATION. 162
MOTORWAY HEIGHT 163
OFF-ROAD HEIGHT 164
ACCESS HEIGHT. 164
TOWING A TRAILER 165

Towing

TOWING 166

Load Carrying

LUGGAGE ANCHOR POINTS. 170
ROOF RACKS 170

Bi-Xenon Headlights

BI-XENON LIGHT UNITS. 171

STEERING COLUMN LOCK

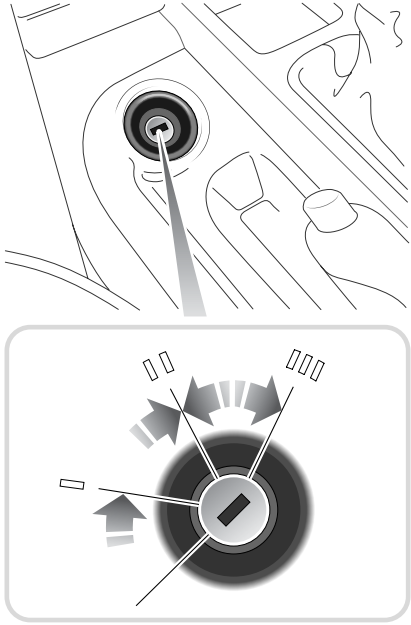

H3923

The starter switch and steering column lock is located on the center console, forward of the parking brake.

To unlock the steering column
Insert the key into the starter switch.

To lock the steering column
Remove the key from the starter switch.

NOTE: *The gear selector MUST be in the 'P' (park) position, before the starter key can be removed.*

WARNING

Once the steering lock is engaged, it is impossible to steer the vehicle. DO NOT remove the key while the vehicle is in motion.

NOTE: *Once removed, the starter key should not be left in close proximity to the starter switch. This can lead to the steering column lock operating repeatedly, discharging the vehicle battery.*

STARTER SWITCH

The starter switch uses the following sequence of key positions to operate the steering lock, electrical circuits and starter motor:

Position 'O'

- Steering locked (if key is removed).
- Most lighting circuits are operational, including: sidelights, headlights and hazard warning lights.
- With the driver's door open, seat switches and seat memory facility operational.

Position 'I'

- Steering unlocked.
- Steering wheel adjusts to set driving position.
- Clock, audio system and cigar lighter can now be operated.

Position 'II'

- All instruments, warning lights and electrical circuits are operational.

Position 'III'

- The starting sequence is initiated - release the key immediately the engine starts cranking (the key returns to position 'II'). The engine will continue to crank automatically until the engine starts. Note that operation of position 'I' electrical functions will be interrupted during engine cranking.

NOTE: *The gear selector position 'P' or 'N' must be selected before the engine will start.*

STARTING

WARNING

Never start or leave the engine running in an unventilated building - exhaust gases are poisonous and contain carbon monoxide, which can cause unconsciousness and may even be fatal.

Before starting the engine and driving, ENSURE you are familiar with the precautions shown under *'CATALYTIC CONVERTER', page 136*.

In particular, you should be aware that if the engine fails to start, continued use of the starter may result in unburnt fuel damaging the catalytic converter.

1. Check that the parking brake is applied and that the gear selector is in the 'P' (Park) or 'N' (Neutral) position.
2. Switch off all unnecessary electrical equipment.
3. Turn the starter switch to position 'II' and then on to position 'III' to operate the starter motor. DO NOT press the accelerator pedal while starting, and RELEASE THE KEY as soon as the engine starts cranking (the engine will automatically continue cranking until the engine starts).

If the engine stalls or fails to start, you MUST return the starter switch to position 'I' before attempting to restart; the engine will not start by turning the starter switch from position 'II'.

NOTE: *The battery charging and oil pressure warning lights should extinguish as soon as the engine is running.*

Cold climates

In very cold climates the oil pressure warning light may take several seconds to extinguish. Similarly, engine cranking times will also increase; at -22°F (-30ºC) the starter motor may operate continuously for as long as 30 seconds before the engine will start. For this reason, ensure that all non-essential electrical equipment is switched off.

After starting

Ensure that the parking brake and foot brake are firmly applied and the accelerator pedal is not depressed while moving the gear selector lever from 'N' or 'P', otherwise, the vehicle may move immediately the selector lever is moved to one of the drive positions ('D' or 'R'). This is particularly important when the engine is cold, because the engine will be idling at a faster speed than normal.

NOTE: *The foot brake MUST be applied, before the gear selection lever can be moved out of 'P' or 'N' into a drive position.*

DRIVING

WARNING

Vehicle stability

Your vehicle has a higher ground clearance and, hence, a higher center of gravity than ordinary passenger cars, to enable the vehicle to perform a wide variety of different off-road applications. An advantage of the higher ground clearance is a better view of the road, allowing the driver to more easily anticipate problems. Inexperienced drivers should take additional care, remembering that the Range Rover is not designed for cornering at the same speeds as conventional passenger cars, any more than a low slung sports car is designed to perform satisfactorily in off-road conditions. As with other vehicles of this type, failure to operate the Range Rover correctly may result in loss of control or even vehicle rollover.

Vehicle height

The overall height of your vehicle exceed that of ordinary passenger cars. Always be aware of the height of your vehicle and check the available headroom before driving through low entrances. This is particularly important if the vehicle is fitted with a roof rack or if a sunroof is tilted open.

Before driving

Learn the layout and function of all the instruments, warning lights and controls.

Adjust the seat to a comfortable driving position from which you can ensure full control of the vehicle.

Always start the vehicle and operate the controls from the driving position.

Instruments and warning lights

Before driving it is important to fully understand the function of the instruments and warning lights (see *'INSTRUMENT PANEL', page 73*).

NOTE: *Red warning lights are of particular importance, illumination indicating that a fault exists. If a red light illuminates, always stop the vehicle and seek qualified assistance before continuing.*

Warming-up

DO NOT warm-up the engine by allowing it to idle at a slow speed.

In the interests of fuel economy, it is advisable to drive the vehicle straight away, remembering that harsh acceleration and labouring the engine before the normal operating temperature has been reached can damage the engine.

When the engine is cold, engine idle speeds will be faster than normal. Under these circumstances, use the foot brake to control the vehicle until the engine is warm and running at normal speed, and be aware of the need to take additional care when manoeuvring the vehicle.

Breaking-in

Proper breaking-in will have a direct bearing on the reliability and smooth running of your vehicle throughout its life.

In particular, the engine, gearbox, brakes and tires need time to ‘bed-in’ and adjust to the demands of everyday motoring. During the first 500 miles (800 km), it is essential to drive with consideration for the running-in process and heed the following advice:

- LIMIT maximum road speed to 70 mph (110 km/h) or 3,000 rev/min. Initially, drive the vehicle on a light throttle and only increase engine speeds gradually once the running-in distance has been completed.
- DO NOT operate at full throttle or allow the engine to labour in any gear. It is advisable NOT to use Sport Mode when running in.
- AVOID fast acceleration and heavy braking except in emergencies.

FUEL ECONOMY

Fuel consumption is influenced by two major factors:

- How your vehicle is maintained.
- How you drive your vehicle.

To obtain optimum fuel economy, it is essential that your vehicle is maintained in accordance with the manufacturer's service schedule.

Items such as the condition of the air cleaner element, tire pressures and wheel alignment will have a significant effect on fuel consumption. But, above all, the way in which you drive is most important. The following hints may help you to obtain better value from your motoring:

- Avoid unnecessary, short, start-stop journeys.
- Avoid fast starts by accelerating gently and smoothly from rest.
- Do not drive in the lower gears for longer than necessary (in Manual mode).
- Decelerate gently and avoid sudden and heavy braking.
- Anticipate obstructions and adjust your speed accordingly well in advance.
- When stationary in traffic, select neutral (‘N’) to improve fuel economy and air conditioning performance.

AUXILIARY EQUIPMENT

CAUTION: DO NOT use auxiliary equipment, such as roller generators, that are driven by one wheel of the vehicle, as they could cause failure of the gearbox differential.

Some local jurisdictions require emission testing using a two-wheel roller dynamometer. Your vehicle is equipped with permanent 4-wheel drive and cannot be safely operated on these machines. For more information regarding safe emission testing of your vehicle, consult your Land Rover retailer.

EMISSION CONTROL SYSTEM

WARNING

Exhaust fumes contain poisonous substances which can cause unconsciousness and may even be fatal.

- ***DO NOT inhale exhaust gases.***
- ***DO NOT start or leave the engine running in an enclosed unventilated area, or drive with the taildoor open.***
- ***DO NOT modify the exhaust system from the original design.***
- ***ALWAYS repair exhaust system leaks immediately.***
- ***If you think exhaust fumes are entering the vehicle have the cause determined and corrected immediately.***

Land Rover vehicles are fitted with emission and evaporative control equipment necessary to meet a number of territorial requirements.

In some jurisdictions it is against the law for vehicle owners to modify or tamper with emission control equipment, or to sanction the unauthorised replacement or modification of this equipment. In such cases the vehicle owner and the repairer may both be liable for legal penalties.

It is important to remember that all Land Rover retailers are properly equipped to perform repairs and to maintain the emission control system on your vehicle.

CATALYTIC CONVERTER

The exhaust system incorporates a catalytic converter, which converts poisonous exhaust emissions from the engine into environmentally less harmful gases.

WARNING

Severe damage to the catalytic converter could occur if the engine is stopped for any length of time when being driven through water whose level is above the exhaust tailpipe.

Catalytic converters can be easily damaged through improper use, particularly if the wrong fuel is used, or if an engine misfire occurs. For this reason it is VERY IMPORTANT that you heed the precautions which follow.

Fuel

ONLY use fuel recommended for your vehicle, see *'V8 ENGINE', page 273*.

Starting the engine

- DO NOT continue to operate the starter after a few failed attempts (unburnt fuel may be drawn into the exhaust system, thereby poisoning the catalyst), and do not attempt to clear a misfire by pressing the accelerator pedal - seek qualified assistance.
- When starting a COLD engine, DO NOT drive if a misfire is suspected and do not attempt to clear a misfire by pressing the accelerator - seek qualified assistance.
- Do not attempt to push or tow-start the vehicle.

Driving

- If a misfire is suspected, the 'Service Engine Soon' warning light is flashing or the vehicle lacks power while driving, (provided the engine has reached its normal operating temperature) avoid high speeds and seek immediate assistance from your Land Rover retailer.
- NEVER allow the vehicle to run out of fuel (the resultant misfire could damage the catalyst).
- Consult your retailer if your vehicle is burning excessive oil (blue smoke from the exhaust), as this will progressively reduce catalyst efficiency.
- On rough terrain do not allow the underside of the vehicle to be subjected to heavy impacts which could damage the catalytic converter.
- DO NOT overload or excessively 'rev' the engine.
- DO NOT switch off the engine when the vehicle is in motion with a drive gear selected.

WARNING

Exhaust system temperatures can be extremely high - DO NOT park on ground where combustible materials such as dry grass or leaves could come into contact with the exhaust system - in dry weather a fire could result.

Vehicle maintenance

- Any engine misfire, loss of engine performance or engine run-on, could seriously damage the catalytic converter. For this reason, it is vital that unqualified persons do not tamper with the engine, and that regular systematic maintenance is carried out by a Land Rover retailer.
- DO NOT run the engine with a spark plug or HT lead removed, or use any device that requires an insert into a spark plug.

GAS STATION SAFETY

WARNING

Petroleum gases are highly inflammable and, in confined spaces, are also extremely explosive.

Always place portable gasoline containers on the ground while filling and keep the pump nozzle in contact with the container to avoid a static electricity ignition of fuel vapors. A fire may result if gasoline is pumped into a container that is inside a vehicle. You could be burned!

Always take sensible precautions when refuelling:

- Switch off the engine.
- Do not smoke or introduce other ignition sources.
- Switch off mobile phones.
- Take care not to spill fuel.
- Do not overfill the tank.
- Do not fill gas cans in the vehicle.
- Do not leave the fuel filler pump unattended during refuelling.
- Use only the hold-open latch provided on the fuel filler pump. Never jam the latch open with some other object.

WARNING

If a flash fire occurs during refuelling, leave the nozzle in the vehicle fill pipe and back away from the vehicle. Notify the station attendant at once so that all dispensing devices and pumps can be shut off with emergency controls. If the facility is unattended, use the emergency intercom to summon help and the emergency shutdown button to shut off the pump.

FUEL FILLER

WARNING

To avoid any sudden discharge of fuel caused by excessive fuel vapor pressure, DO NOT fully remove the filler cap until any captive tank pressure has been released.

Take careful note of warning labels located around the filler flap.

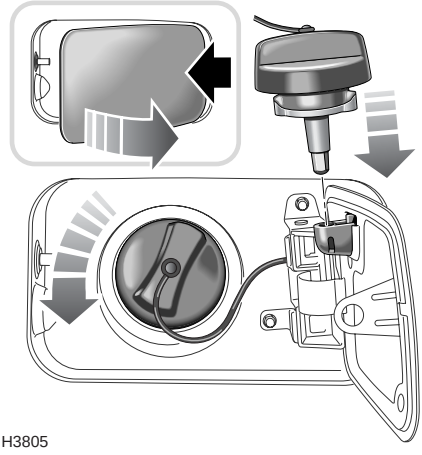

H3805

The fuel filler is located in the rear right-hand wing. With the vehicle fully unlocked (all doors and tailgate), press the right side of the fuel filler flap to open (shown in inset).

Carefully turn the cap anti-clockwise and allow any fuel tank pressure to be released. Once the pressure is released, it is safe to fully remove the filler cap. When refuelling, insert the filler cap in the socket on the back of the filler flap (see illustration).

When replacing, tighten the cap clockwise until you hear the fuel cap ratchet click once.

TYPE OF FUEL

IMPORTANT INFORMATION

ONLY USE UNLEADED FUEL

- Unleaded fuel is essential for proper operation of the emission control system.

DO NOT use leaded fuel! Your engine is designed to use unleaded fuel ONLY.

- Even a very small quantity of leaded fuel will damage your vehicle's emission control system and could invalidate the emissions warranty. In addition, leaded fuel will damage the oxygen sensors in the fuel injection system and also seriously damage the catalyst in the catalytic converter.

Fuel system cleaning agents should be avoided, as many of these products can be harmful to gaskets and other materials used in fuel system components.

Octane requirements

Premium unleaded gasoline with a CLC or AKI octane rating of 90 - 92 should be used.

NOTE: *Federal law requires that gasoline octane ratings be posted on the pumps. The Cost of Living Council (CLC) octane rating or Anti Knock Index (AKI) octane rating shown is an average of Research Octane Number (RON) and Motor Octane Number (MON).*

Using unleaded fuel with an octane rating lower than that recommended, can cause persistent, heavy ‘engine knock’ (a metallic rapping noise). If severe, this can lead to engine damage.

If heavy engine knock is detected when using the recommended octane rated fuel, or if steady engine knocking is present while maintaining a steady speed on level roads, contact your retailer for advice.

NOTE: *An occasional, light, engine knock while accelerating or climbing hills is acceptable.*

Octane enhancers

The use of octane enhancers is not recommended and may invalidate the vehicle warranty.

NOTE: *Reformulated gasolines and gasolines that contain detergents, anti-corrosion and stability additives are recommended - they will help your vehicle maintain the correct level of emissions and engine performance.*

Driveability

If you encounter driveability, starting and stalling problems, especially in high ambient temperatures or at high altitude when the engine is cold, it may be caused by poor quality fuel. Try an alternative brand and if the problem persists, seek advice from your retailer.

Gasoline/oxygenated fuel blends

To avoid invalidating the vehicle warranty, use ONLY fuels blended within the following limits:

- Up to 15% of Methyl Tertiary Butyl Ether (MTBE) and unleaded fuel mix.
- Up to 15% of Ethyl Tertiary Butyl Ether (ETBE) and unleaded fuel mix.
- Up to 10% of Ethanol (Ethyl or grain alcohol) and unleaded fuel mix.

Methanol/unleaded fuel blends
In some areas, it is possible to buy unleaded fuel that is blended with up to 5% Methanol (Methyl or wood alcohol) and cosolvents and corrosion preventatives. Using these blends can cause driveability problems and damage the fuel system components. Their use may also invalidate the vehicle warranty.
WHEREVER POSSIBLE, AVOID USING FUEL CONTAINING METHANOL!

WARNING

Automotive fuels can cause serious injury and even death if misused.

Methanol/unleaded fuel blends, even in small amounts, can cause blindness and possible death if swallowed. Additionally, take precautions to prevent methanol from coming into contact with the skin.

FUEL FILLING

Gas station pumps are equipped with automatic cut-off sensing to avoid fuel spillage. Fill the tank SLOWLY until the filler nozzle automatically cuts off the supply. DO NOT attempt to fill the tank beyond this point or spillage could result due to expansion of the fuel.

The fuel filler neck will accept ONLY a narrow filler nozzle of the type found on pumps that deliver UNLEADED fuel. A flap lies across the filler neck; insert the nozzle sufficiently to fully open the flap before filling.

Filling difficulties
The fuel delivery rate of gas station pumps can vary significantly. This, coupled with the fact that modern pumps are equipped with a sensor which automatically cuts off the supply as soon as turbulence is detected in the upper part of the vehicle's filler neck, could result in isolated fuel filling problems.

EMPTY FUEL TANK

IMPORTANT INFORMATION

DO NOT run the fuel tank dry!

- Running the fuel tank dry could create an engine misfire capable of damaging the catalytic converter. DO NOT RUN THE FUEL TANK DRY!

FUEL FILLER FLAP EMERGENCY RELEASE

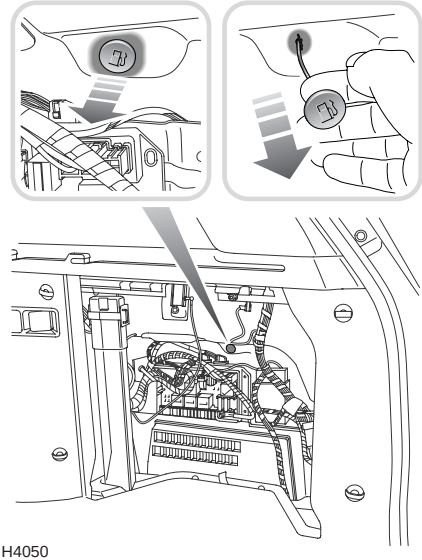

H4050

If the vehicle battery has been disconnected or has discharged, the fuel filler flap can be opened manually. Open the rear loadspace access hatch. Pull the green release handle (as illustrated in the insets) to open the filler flap.

USING PARK DISTANCE CONTROL (PDC)

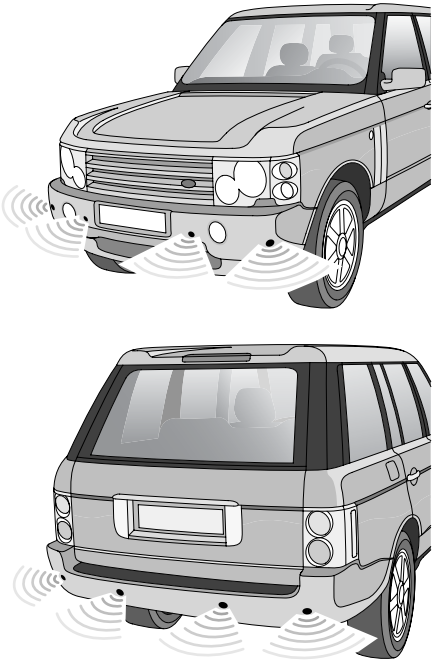

H3934

WARNING

The parking aid is not infallible, it is for guidance only! The sensors may not be able to detect certain types of obstruction (narrow posts or small narrow objects, small objects close to the ground and some objects with dark, non-reflective surfaces, for example).

Park Distance Control (PDC) is a system that assists the driver when manoeuvring the vehicle into a parking space, or anywhere there are obstacles that need to be avoided, warning the driver accordingly.

The vehicle is fitted with four ultrasonic sensors on each of the bumpers.

The range of the front sensors, and the two sensors on the corners of the rear bumper is approximately 2 feet (0.6 metre). The two center rear sensors have a range of approximately 5 feet (1.5 metres).

WARNING

Keep the sensors free from dirt, ice and snow. If deposits build up on the surface of the sensors, their performance may be impaired. When washing the vehicle, avoid aiming high pressure jets directly at the sensors at close range.

Activating PDC
PDC is automatically activated whenever the reverse gear ('R') is engaged. When the starter switch is turned on, the indicator light in the switch illuminates and a short tone sounds after 1 second as confirmation.

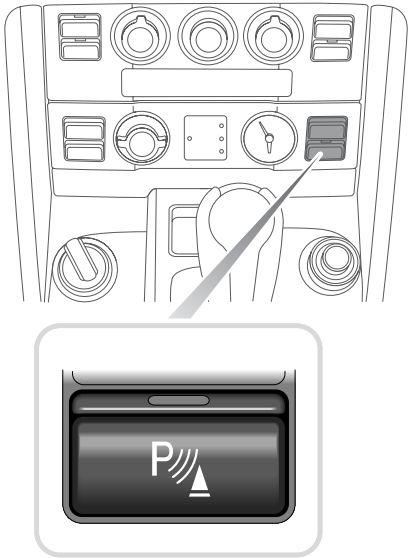

H4879

PDC can also be manually selected by pressing the switch (illustrated) on the center front facia (the indicator light in the switch illuminates and a short tone sounds as confirmation). A second press of the switch deactivates the PDC system. If PDC has been manually switched off by pressing the switch, it will not activate automatically until either the switch has been pressed again, or the starter switch has been turned off and on again.

NOTE: *The confirmation tone only sounds the first time that PDC is selected (either by selecting reverse, or by pressing the switch), unless the starter switch has been turned off between uses.*

If a long, high pitched tone sounds and the switch indicator light flashes when PDC is activated, then a fault in the system has been detected - contact your retailer for assistance.

PDC in operation
The distance from an obstruction is identified by an intermittent tone sounding (higher pitch for the front sensors and a lower pitch for the rear). As the vehicle moves closer to an obstruction, the frequency of the tone increases proportionally.

When the distance between the sensor and the obstruction is less than approximately 1 foot (0.30 metre), the tone becomes continuous.

PDC will remain active until the vehicle speed exceeds approximately 20 mph (30 km/h) or until the vehicle has travelled approximately 165 feet (50 m), when it will automatically deactivate.

GEAR SELECTOR

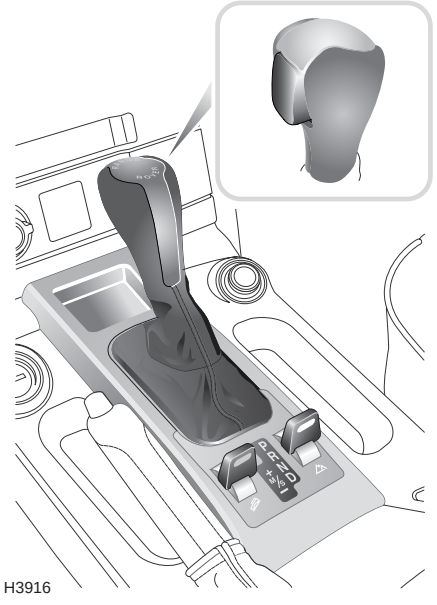

H3916

The CommandShift transmission provides both automatic and manual operation of the gears.

Automatic operation
The transmission is naturally in automatic mode. With the engine started, gear selection can be made by moving the selector backward or forward to the appropriate position in a similar manner to other automatic gearboxes.

GEAR SELECTOR LEVER

Selector release button
The gearbox is fitted with a locking mechanism, designed to minimise the risk of accidental selection of the ‘P’ (Park) and ‘R’ (Reverse) positions.

The selector release button (see inset) must be pressed while selecting ‘P’ and ‘R’, and also to enable the lever to be moved between the ‘P’ and ‘R’ positions.

NOTE: *With the engine running, or the starter switch in position ‘II’, the selector lever cannot be moved into a drive position unless the foot brake is applied.*

CAUTION:

- DO NOT select ‘P’ or ‘R’ if the vehicle is moving.
- DO NOT select a forward drive gear when the vehicle is moving backwards.
- Keep engine speed as low as possible when moving the selector between ‘R’ and a forward gear.

NOTE: *The gear selector lever MUST be in the ‘P’ position before the starter key can be removed.*

Selector lever positions
An indicator light on the selector panel and a number or letter on the gear selector display in the instrument panel, identify the selected gear position.

'P' - Park:
This position mechanically locks the transmission and should be selected before switching the engine off. To avoid transmission damage, ensure the vehicle is completely stationary, with the parking brake applied, before selecting 'P'.

The selector release button MUST be pressed, in order to move the selector lever into, or out of, the Park position.

'R' - Reverse:
Before selecting reverse, ensure the vehicle is stationary, with the brakes applied. Press the selector release button in order to move the selector lever into Reverse.

With the selector lever in the 'R' position, Hill Descent Control can be selected (see *'HILL DESCENT CONTROL', page 160*).

'N' - Neutral:
Select neutral when the vehicle is stationary and the engine is required to idle for a brief period (at traffic lights, for example). In neutral, the transmission is not locked, so the parking brake must be applied whenever 'N' is selected.

Press the selector release button to move from neutral to reverse.

'D' - Drive:
Select for all normal driving; full automatic gear changing occurs on all five forward gears, according to road speed and accelerator position.

Sport mode

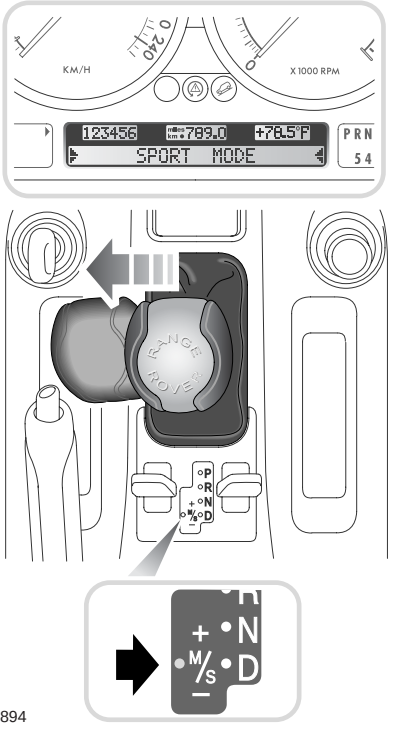

H4894

In Sport mode, full automatic progression through the gear ratios is retained. By selecting Sport mode however, the power transmitted to the road wheels is increased by making lower gears more available. This results in improved mid-range performance, as the vehicle stays in the lower gears for longer. Sport mode also makes the lower gears more available for ‘kick-down’ operation.

To select Sport mode, move the gear lever sideways across the gate from the ‘D’ - Drive position towards the left hand side of the vehicle (see illustration). The word SPORT will appear in the transmission message center (for approximately 6 seconds), the LED in the selector display to the rear of the selector lever (arrowed in inset) illuminates and ‘SPORT MODE’ is displayed in the main message center for 6 seconds.

Sport mode can be deselected at any time, by returning the lever to the ‘D’ position.

MANUAL CommandShift™ GEAR SELECTION

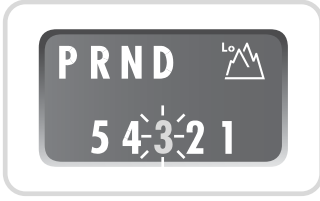

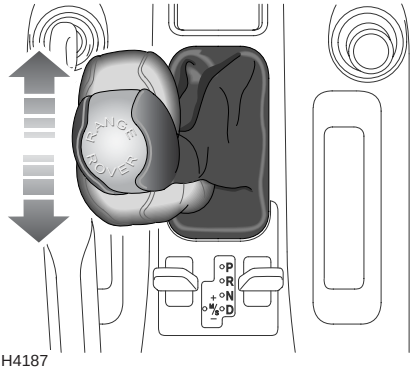

H4187

CommandShift gear selection can be used as an alternative to fully automatic transmission and is particularly effective when rapid acceleration or engine braking into corner and descents are required.

There are five ‘gears‘, all of which are selected sequentially by a single forward or rearward movement of the gear selector lever, as follows:

1. With ‘D’ (Drive) selected, move the gear selector lever sideways from the ‘D’ position towards the left hand side of the vehicle (this is exactly the same as selecting Sport mode).
2. The transmission then automatically selects the ratio most appropriate to the vehicle's road speed and accelerator depression.
3. A single forward (‘+’) movement of the selector lever will change the transmission to a higher gear, while rearward (‘-’) movement of the lever will change down to a lower gear. Repeated forward or rearward movements of the lever can be made until the desired gear ratio has been selected. The selected gear will be indicated in the digital display in the instrument panel (see inset).
4. To deselect manual mode, simply move the selector lever sideways, back to the ‘D’ position. Automatic gear changing will then resume.

NOTE: *In manual mode, ‘kick-down’ is still available for increased acceleration. See “Kick-down”, page 148, for more information.*

Using CommandShift in HIGH range

If manual mode is selected in HIGH range, 1st gear must be selected to move off from stationary, normal sequential gear changing can be utilised once the vehicle is moving.

Using CommandShift in LOW range

If manual mode is selected in LOW range, the vehicle can move off from stationary in 1st, 2nd or 3rd gear - this is particularly useful to improve traction when driving off-road. See the *‘Off-road Driving’* section of this handbook, for further details.

USING AN AUTOMATIC GEARBOX

The following information is particularly important for drivers who are unfamiliar with the techniques required to drive vehicles with automatic transmission.

Starting

The engine can only be started with the selector lever in the 'P' (Park) or 'N' (Neutral) positions.

- ALWAYS apply the parking brake and foot brake before starting the engine.
- KEEP THE BRAKES APPLIED while moving the selector lever into a drive position (the selector lever cannot be moved from the 'P' position unless the foot brake is applied).
- DO NOT 'rev' the engine or allow it to run above normal idle speed while selecting 'D' or 'R', or while the vehicle is stationary with any gear selected.
- ALWAYS keep the brakes applied until you are ready to move off - remember, once a drive gear has been selected, an 'automatic' will tend to creep forward (or backward if reverse is selected).
- DO NOT allow the vehicle to remain stationary for any length of time with a drive gear selected and the engine running (always select 'N' if the engine is to idle for a prolonged period).

IMPORTANT INFORMATION
This vehicle can NOT be 'push' or 'tow' started.

Driving in 'D' or Sport mode

When driving, the transmission will automatically adjust to the most appropriate gear ratio, according to accelerator position, vehicle speed and terrain (whether the vehicle is driving uphill, downhill or on the flat).

Gear change speeds

With 'D' selected, the road speeds at which gear changes take place will vary according to the position of the accelerator pedal: minimum acceleration will result in gear changes at low road speeds, while larger throttle openings will cause the gearbox to delay gear changes until faster road speeds have been reached (thereby increasing the rate of acceleration). Depending on vehicle speed, moderate pressure of the accelerator pedal may result in a downshift in gear, further increasing the rate of acceleration.

With practice, gear changes can be made to occur at a wide range of road speeds depending on the accelerator position.

'Kick-down'

To provide rapid acceleration for overtaking, push the accelerator pedal to the full extent of its travel (this is known as 'kick-down'), a 'click' will be felt through the accelerator pedal. Up to a certain speed, this will cause an immediate downshift to the lowest appropriate gear, followed by rapid acceleration. Once the pedal is relaxed, normal gear change speeds will resume (dependent upon road speed and accelerator pedal position).

NOTE: *Moderate accelerator pressure may also result in a downshift in the transmission, depending on vehicle speed.*

'Kick-down' in manual CommandShift mode:
When in manual CommandShift mode, kick-down overrides the manual gear selection, to provide increased acceleration. The characteristics of kick-down operation differs according to the gear range selected (HIGH or LOW).

In HIGH range, with manual mode selected, kick-down will cause a downshift of at least two gears ('5' to '3', for example). When in LOW range, the downshift will only be one gear ('5' to '4', for example).

Parking
After bringing the vehicle to a stop, ALWAYS apply the parking brake and select 'P', before releasing the foot brake and switching off the engine. The starter key can only be removed if 'P' is selected.

ELECTRONICALLY SELECTED AUTOMATIC MODES

The transmission control system electronically selects different gear change modes, listed below, designed to suit a variety of driving conditions.

NOTE: *The electronic modes described below cannot be selected by the driver and will not operate if 'Sport' mode is selected.*

Hill ascent, trailer and high altitude mode
A suitable gear change pattern is selected which retains lower gears for longer, to counter momentum loss caused by more frequent gear changing, which can occur when climbing hills or when towing a trailer or caravan. This gear change pattern is also selected at high altitudes to combat reduced engine torque.

Hill descent mode
When in manual CommandShift mode, with the optimum gear for engine braking selected, the selector lever can then be moved across to the 'D' position. The transmission will retain the previously selected 'manual' gear until the descent is completed, then the transmission will automatically change to 'D'.

High coolant temperature mode
In high ambient temperatures during extreme load conditions, the transmission will select a gear change pattern designed to aid the cooling process, whilst enabling the gearbox to continue performing normally.

TRANSFER GEAR SWITCH

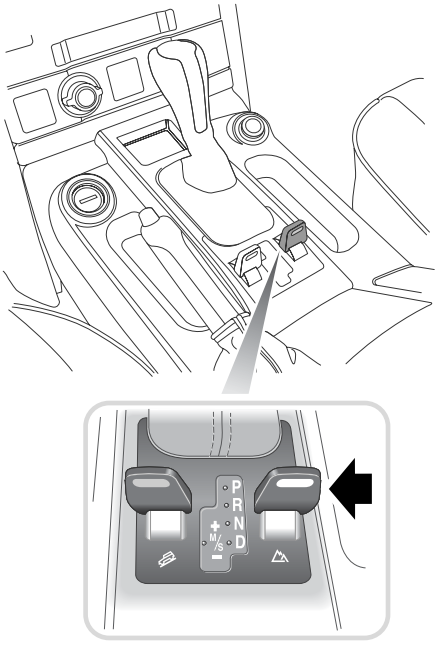

H4951

The second gearbox (known as the transfer box) is used to select either the high or low range of gears.

High range ('H')
The high range ratio should be used for all normal road driving and also for off-road driving across dry, level terrain.

Low range ('L')
Use the low range ratio ONLY in situations where low speed manoeuvring is necessary, such as reversing a trailer or negotiating a boulder strewn river bed; also use low range for more extreme off-road conditions where progress in high range cannot be maintained. DO NOT attempt to use the LOW range ratio for normal road driving.

USING THE TRANSFER GEARBOX

Your vehicle is equipped with an electronically controlled transfer gearbox. There are two ways of operating the transfer gear switch; the stationary method - recommended for inexperienced drivers - and the 'on the move' method for experienced drivers.

CAUTION: DO NOT attempt to use LOW range gears for normal road driving. Doing so will limit the vehicle's top speed and may damage drivetrain components.

Stationary method
With the vehicle stationary and the engine running, apply the foot brake and then move the automatic gearbox selector to the 'N' (neutral) position before moving the transfer gear switch (arrowed) fully rearwards. When the switch is released, it returns to the default position.

Changing from high to low on the move
With the vehicle slowing down and travelling NO FASTER THAN 10 mph (16 km/h), select 'N' (neutral) in the main gearbox, then move the transfer gear switch fully rearwards (the switch returns to the 'forward' position when released). The low range indicator light in the gear selector display flashes while the range change is occurring. When the range change is complete, the light illuminates constantly, a warning chime will sound and 'LOW RANGE' is displayed in the message center for a few seconds. Now select 'D' (drive) or Manual CommandShift mode. The transmission interlock prevents the engagement of a drive gear until the range change is complete.

NOTE: *If the vehicle speed is too great when a range change is requested, a warning chime sounds and 'SLOW DOWN' appears in the message center.*

Changing from low to high on the move
With the vehicle travelling NO FASTER THAN 30 mph (48 km/h), select 'N' (neutral) in the main gearbox, then move the transfer gear switch fully rearwards (the switch returns to the 'forward' position when released). The low range indicator light in the gear selector display flashes while the range change is occurring. When the range change is complete, the light extinguishes, a warning chime will sound, and 'HIGH RANGE' is displayed in the message center for a few seconds. Now select 'D' (drive). The transmission interlock prevents the engagement of a drive gear until the range change is complete.

NOTE: *If the vehicle speed is too great when a range change is requested, a warning chime sounds and 'SLOW DOWN' appears in the message center.*

NOTE: *If the vehicle is travelling at 2 mph (3 km/h) or less, then any change of ratio is to be carried out as if the vehicle is stationary (i.e. apply the foot brake and select 'N', before moving the transfer gear switch). This is necessary to prevent the interlock feature locking the selector lever in 'N'.*

CRUISE CONTROL

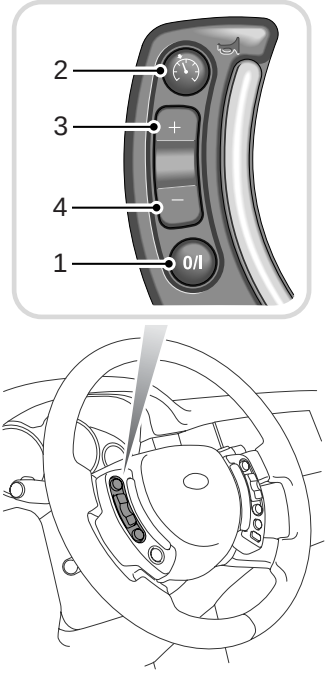

H4084

Cruise control enables the driver to maintain a constant road speed without using the accelerator pedal. This is particularly useful for motorway cruising or for any journey where a constant speed can be maintained for a lengthy period.

The cruise control system has four switches:

1. Master switch (On/Suspend/Off).
2. Resume switch.
3. Accelerate set switch.
4. Decelerate switch.

WARNING

DO NOT use cruise control on winding or slippery road surfaces, or in traffic conditions where a constant speed cannot easily be maintained.

CAUTION:
Always observe the following precautions:

- DO NOT use cruise control when using reverse gear.
- DO NOT use cruise control in off-road conditions such as rough tracks or on sand.
- Use of ‘sport’ mode is not recommended when cruise control is selected.
- ALWAYS switch off the master switch when you no longer intend to use cruise control.

NOTE: *Cruise control is NOT available when the vehicle is being driven in LOW range gears.*

To operate

1. Press the master switch (warning light in the instrument panel illuminates).
2. Accelerate until the desired cruising speed is reached. This must be above the system's operational minimum speed of 20 mph (30 km/h).
3. Press the ‘+’ switch (3) to set the vehicle speed in the system's memory. Cruise control will now maintain that road speed without the need for operation of the accelerator pedal.

With cruise control operating, speed can be increased by normal use of the accelerator e.g. for overtaking. When the accelerator is released, road speed will return to the selected cruising speed.

To reduce the cruising speed:
Press and hold the '-' switch (4); the vehicle will decelerate . Release the switch as soon as the desired speed is reached. The vehicle speed at the point of switch release becomes the new set speed.

Alternatively, the set speed can be decreased incrementally by 'tapping' the '-' switch. Each press of the switch will decrease the speed by 0.6 mph (1 km/h).

NOTE: *Cruise control will not operate at speeds below 20 mph (30 km/h).*

To increase the set cruising speed:
Press and hold the '+' switch (3); the vehicle will accelerate . Release the switch as soon as the desired speed is reached.

The vehicle speed at the point of switch release becomes the new set speed.

Alternatively, the set speed can be increased incrementally by 'tapping' the '+' switch. Each press of the switch will increase the speed by 0.6 mph (1 km/h).

A further alternative is to increase speed by normal use of the accelerator. When the desired speed is reached, press the '+' switch (3) to set the cruise control.

Suspending cruise control
Cruise control will suspend when the gear selector is moved into neutral, or when the brake pedal is pressed or if HDC or DSC becomes active. Cruise control can also be suspended by a single press of the master switch (1).

To resume cruise control at the previously set speed, press the resume switch (2).

Switching off cruise control
To switch off cruise control, press the master switch (1) once to suspend cruise control and then press and hold the switch again until the warning light in the instrument panel extinguishes.

NOTE: *The set speed held in the cruise control memory will be erased when either the master switch (1) or the starter switch is turned off.*

FOOT BRAKE

For your safety, the hydraulic braking system operates through dual circuits. If one circuit should fail, the other will continue to function. However, in the event of brake failure where only one circuit is operational, the vehicle should only be driven at slow speed to the nearest qualified retailer. In these circumstances, exercise extreme caution and be aware that increased brake pedal travel, greater pedal pressure, and longer stopping distances will be experienced.

Power assistance

The braking system is power assisted, but ONLY when the engine is running. Without this assistance greater braking effort is necessary to safely control the vehicle, resulting in longer stopping distances. Always observe the following precautions:

- NEVER allow the vehicle to freewheel with the engine turned off.
- ALWAYS take particular care when being towed with the engine turned off.
- If the engine should stop for any reason while the vehicle is in motion, bring the vehicle to a halt as quickly as traffic conditions safely allow, and DO NOT pump the brake pedal as the braking system may lose any remaining assistance available.

Wet conditions

Driving through water or even very heavy rain may adversely affect braking efficiency. Always dry the braking surfaces by intermittent light application of the brakes, first ensuring that you are at a safe distance from other road users.

Brake pads

Brake pads require a period of bedding in. For the first 500 miles (800 km), you should avoid situations where heavy braking is required.

Remember! Regular servicing is vital to ensure that the brake pads are examined for wear and changed periodically to ensure long term safety and optimum performance.

CAUTION: DO NOT rest your foot on the brake pedal while travelling, as this may overheat the brakes, reduce their efficiency and cause excessive wear.

WARNING

NEVER place non-approved floor matting or any other obstructions under the brake pedal. This restricts pedal travel and braking efficiency.

NEVER move a vehicle without the engine running because braking assistance will not be available. The pedal brakes will still function, but more pressure will be required to operate them.

If the brake warning light should illuminate while the vehicle is in motion, bring the vehicle to a halt as quickly as traffic conditions and safety permit and seek qualified assistance before continuing. DO NOT pump the brake pedal - the braking system may lose any remaining servo assistance available.

ANTI-LOCK BRAKES

CAUTION: ABS cannot overcome the physical limitations of stopping the vehicle in too short a distance, cornering at too high a speed, or the danger of aquaplaning, i.e. where a layer of water prevents adequate contact between the tires and the road surface.

The fact that a vehicle is fitted with ABS must never tempt the driver into taking risks that could affect his/her safety or that of other road users. In all cases, it remains the driver's responsibility to drive within normal safety margins, having due consideration for prevailing weather and traffic conditions.

The driver should always take account of the surface to be travelled over and the fact that brake pedal reactions will be different to those experienced on a non-ABS vehicle.

The purpose of the anti-lock braking system (ABS) is to allow efficient braking without wheel locking - thereby allowing the driver to retain steering control of the vehicle.

Under normal braking conditions, (where sufficient road surface friction exists to slow the vehicle without the wheels locking), ABS will not be activated. However, should the braking force exceed the available adhesion between the tires and the road surface, then ABS will automatically come into operation. This will be recognisable by a rapid pulsation felt through the brake pedal.

In normal road use, in an emergency situation, ABS functions most effectively when full braking effort is be applied even when the road surface is slippery. The ABS system constantly monitors the speed of each wheel and varies the brake pressure to each, according to the grip.

No matter how hard you brake, you should be able to continue steering the vehicle as normal.

WARNING

DO NOT pump the brake pedal at any time; this will interrupt operation of the system and may increase the stopping distance.

NEVER place non-approved floor matting or any other obstruction under the brake pedal. This restricts pedal travel and may impair brake efficiency.

NOTE: *If the vehicle power supply has been interrupted, ABS will be de-activated. ABS can be reactivated by driving a short distance, or by turning the steering wheel from one limit position to the other while the vehicle is stationary and with the engine running. The ABS warning light will extinguish when the system is reactivated.*

Warning light

A fault with the ABS system is indicated by illumination of the amber ABS warning light. If the light illuminates, drive with care, avoiding heavy brake applications and seek qualified assistance urgently. For further information on the functionality of the ABS warning light, see *'Anti-lock braking system - AMBER', page 84*.

Off-road driving
While anti-lock braking is designed to operate equally effectively in 'off-road' driving conditions, on certain surfaces total reliance on the system may be unwise - remember, in normal circumstances, anti-lock braking operates only AFTER the wheels have started to slip. It cannot reliably compensate for driver error or inexperience on difficult off-road surfaces.

Note the following:

- On soft or deep surfaces such as powdery snow, sand or gravel, and on extremely rough ground, the braking distance required by the anti-lock braking system may be greater than for normal braking, even though improved steering would be experienced. This is because the natural action of locked wheels on soft surfaces is to build up a wedge of surface material in front which assists the wheels to stop.
- If the vehicle is stopped on a very steep slope where little traction is available, it may slide with the wheels locked because there is no wheel rotation to signal movement to the ABS. To counteract this, briefly release the brakes to permit some wheel movement, then re-apply the brakes to allow ABS to gain control.
- Before driving off-road read and thoroughly understand the *'Off-road driving'* section of this handbook, see *'BEFORE YOU DRIVE', page 175*.

Cornering brake control (CBC)
Cornering brake control (CBC) is an advanced form of ABS, which maintains vehicle stability and steerability when braking whilst cornering or changing lanes at speed.

Emergency brake assist (EBA)
If the brake pedal is depressed rapidly, EBA automatically boosts the braking force to a maximum and thus helps to stop the vehicle in the shortest possible distance, when a full brake application is made. Also, if the driver brakes more slowly, but with sufficient brake pressure to activate ABS on both front wheels, the system automatically increases the braking force so that all four wheels are in ABS control, optimising the performance of the ABS system.

Pressure should be maintained on the brake pedal during the entire brake application. If the brake pedal is released, EBA will cease operation.

A fault with the EBA system is indicated by illumination of the amber brake warning light. In the event of a fault, the system should be checked by a Land Rover retailer at the earliest opportunity.

Electronic brake force distribution (EBD)
Your vehicle is equipped with Electronic Brake Force Distribution (EBD), which balances the distribution of braking forces between front and rear axles, in order to maintain maximum braking efficiency under all vehicle loading conditions.

For example; under light loads EBD applies less effort to the rear brakes to maintain vehicle stability, conversely allowing full braking effort to the rear wheels when the vehicle is towing or is heavily laden.

A fault with the EBD system is indicated by illumination of the red brake warning light. If this illuminates while the vehicle is being driven, gently stop the vehicle as soon as safety permit and seek qualified assistance.

PARKING BRAKE

To engage the parking brake, pull the lever up (the parking brake warning light illuminates).

To release, pull the lever up slightly, depress the button and lower the lever (the parking brake warning light extinguishes).

IMPORTANT INFORMATION
Always apply the parking brake fully whenever you park. DO NOT rely on the parking brake to operate effectively if the vehicle has been subjected to immersion in mud and water, see *'After wading', page 185*.

When parking on a slope, do not rely on the parking brake alone to hold the vehicle, always select 'P' (park) for extra security.

Ensure the parking pawl of the gearbox has fully engaged by carefully releasing the foot brake and allowing the vehicle to 'rock' into 'P' (park). This is particularly important when LOW range is selected.

WARNING

DO NOT apply the parking brake whilst the vehicle is in motion (except in an emergency), as this could result in a loss of vehicle control and damage to the transmission.

WARNING

In exceptional cases, if the parking brake has to be used to slow or stop the vehicle, do not pull the lever up too hard. Keep the button on the lever depressed the whole time.

Too violent an application of the parking brake could over-brake the rear wheels and cause the rear of the vehicle to skid.

NOTE: *The brake lights do not illuminate when the parking brake is applied.*

DYNAMIC STABILITY CONTROL (DSC)

WARNING

Dynamic Stability Control (DSC) is unable to compensate for driver misjudgement. It remains the driver's responsibility to adopt a suitable driving style in every driving situation. Risks should never be taken on account of the additional security afforded by the DSC system.

DSC optimises dynamic stability, even in critical driving situations. The system controls dynamic stability when accelerating and when starting from a standstill. Additionally, it identifies unstable driving behaviour, such as understeering and oversteering and helps to keep the vehicle under control by manipulating the engine output and applying the brakes at individual wheels. Some noise may be generated when the brakes are applied. The system is ready to operate each time the engine is started.

Warning light

The warning light illuminates as a bulb and system check when the starter switch is turned to position 'II' and should extinguish when the engine is running.

If the warning light flashes, the system is active, regulating engine output and brake forces.

If the light fails to extinguish when the engine is started, or illuminates when driving, a fault in the system has been detected or DSC has been manually deselected. The vehicle can still be driven with care, but be aware that driving characteristics of the vehicle may change in adverse conditions.

Suspending DSC operation

Land Rover recommend that DSC is operational in all normal driving conditions.

In some driving conditions, where forward traction should be maximised, it may be beneficial to deactivate DSC. Such conditions include:

- To 'rock' the vehicle out of a hollow or out of a soft surface.
- Starting in deep snow or on a loose surface.
- Driving in deep sand.
- Driving on tracks with deep longitudinal ruts.
- Driving through deep mud.

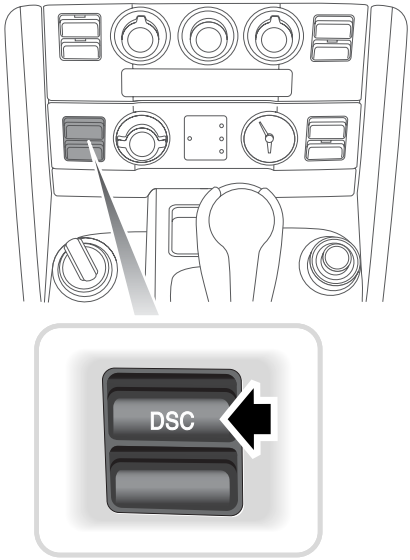

H5216

To deactivate DSC, press the DSC switch on the facia (the DSC warning light will illuminate continuously). Deactivating DSC has no effect on traction control operation.

NOTE: *Driving with DSC deactivated, may add additional loads on the brakes - always drive with DSC switched on if possible*

Reactivating DSC
To reactivate DSC, press the DSC switch on the facia. DSC will automatically reactivate when the engine is started.

NOTE: *If the battery is discharged or has been disconnected, the DSC and ABS warning lights will illuminate constantly as a reminder that the system is not active. To reactivate the DSC system, either turn the steering wheel from lock to lock (with the engine running and the vehicle stationary), or drive the vehicle for a short distance around a curve. When the system is reactivated, the warning lights will extinguish and the system will be fully active.*

ELECTRONIC TRACTION CONTROL (ETC)

ETC is continuously available to boost vehicle traction when one or more wheels has a tendency to spin, while the others have more grip. It operates in conjunction with the DSC system. If a wheel is spinning, ETC automatically brakes that wheel until it regains grip. This braking activity causes the engine power to be transferred to the remaining wheels. Some noise may be generated when the brakes are applied.

HILL DESCENT CONTROL

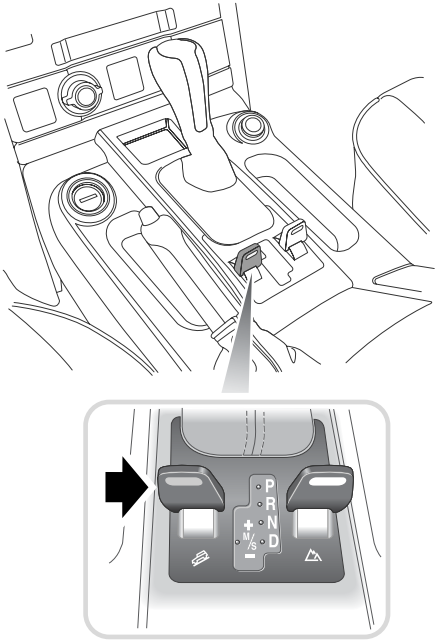

H4949

Hill Descent Control (HDC) operates in conjunction with the anti-lock braking system to provide greater control in off-road situations particularly when descending severe gradients.

To select HDC

HDC can be selected at any speed if LOW range is selected in the transfer gearbox, and can be selected at up to 20 mph (35 km/h) if the vehicle is in HIGH range. The HDC 'Information' warning light in the instrument pack will illuminate when HDC has been successfully selected.

Move the switch (arrowed) fully rearwards to select HDC.

If the vehicle speed is too high when an attempt to select HDC is made, 'NO HDC - SLOWDOWN' appears in the message center and the HDC warning light will extinguish when the switch is released.

To deselect HDC, move the switch rearwards (the warning light will extinguish). If HDC is deselected when HDC is operating, the warning light will flash as the system 'fades out' - allowing the vehicle to gradually increase in speed.

When used in LOW range, HDC controls the vehicle speed more aggressively. Use LOW range gears when steep descents are to be attempted.

NOTE: *If the vehicle speed exceeds 35 mph (60 km/h) when in HIGH range, HDC will be automatically deselected (warning light extinguishes). HDC is also automatically deselected if the vehicle ignition is switched off for more than 6 hours.*

Hill Descent Control in action

HDC can be used with the transmission in CommandShift mode, in 'R' (reverse) and 'D' (drive). When in 'D', the vehicle will automatically select the most appropriate gear.

During a descent, if engine braking is insufficient to control the vehicle speed, HDC (if selected) automatically operates the brakes to slow the vehicle and maintain a speed relative to the selected gear range and the accelerator pedal position.

When driving off-road, HDC can be permanently selected, to ensure that control is maintained. ABS and traction control are still fully operational and will assist if the need arises.

NOTE: *With HDC selected, gear changes can be carried out in the normal way.*

If the brake pedal is depressed when HDC is active, HDC is overridden and the brakes will perform as normal (a pulsation might be felt through the brake pedal). If the brake pedal is then released, HDC will recommence operating at a reduced speed.

In extreme circumstances, the HDC system may cause brake temperatures to exceed their pre-set limits. If this occurs, 'HDC TEMP. NOT AVAIL.' will be displayed in the message center. HDC will then fade out (warning light flashes) and then become temporarily inactive. HDC will not be available until the brakes reach an acceptable temperature, at which time the warning message will disappear from the message center and HDC will, if required, resume operating.

If a fault is detected in the HDC system, 'HDC INACTIVE' will appear in the display. Do not attempt a steep descent when HDC is unavailable. If a fault has been detected, consult your retailer at the earliest opportunity.

HDC fade-out

HDC fade-out gradually decreases the HDC brake intervention with the effect that the rate of hill descent will increase. If this occurs the HDC information light will flash for the period that HDC takes to fade. HDC will be disabled completely once the descent is complete.

If required (e.g. the angle of the descent levels out significantly), fade-out may be achieved deliberately by deselecting HDC while the system is operating.

If a fault with the HDC system is detected, or if the braking system exceeds a pre-set temperature due to extreme conditions, HDC will automatically fade out.

Warning light

HDC information light - GREEN

The light illuminates briefly as a bulb and system check when the starter switch is turned to position 'II' and also when HDC is selected.

If HDC is selected and the operating conditions are met, the light will illuminate continuously.

If the light flashes while HDC is active, normal functionality may cease and HDC 'fade out' may be induced.

ELECTRONIC AIR SUSPENSION (EAS)

When the engine is running, the EAS operates automatically on the vehicle to maintain a level or efficient vehicle height regardless of vehicle load.

If the height of the vehicle is reduced by additional loading (attachment of a trailer, for example), the system automatically increases air pressure to the springs to compensate for the additional weight or changed angle of the vehicle. Similarly, if loads are removed and the vehicle height increases in consequence, the system will reduce air pressure to bring the vehicle back to a level position.

MANUAL OPERATION

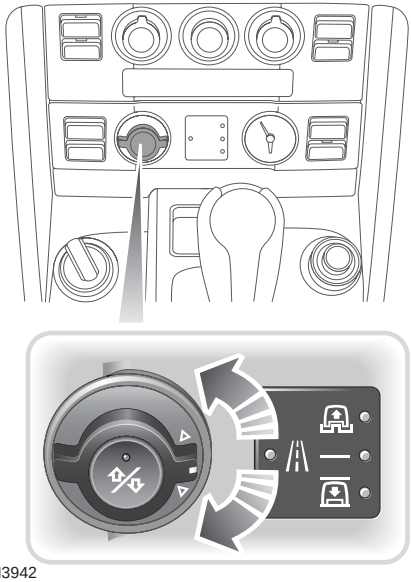

H3942

Your vehicle is fitted with an electronically controlled air suspension system (EAS) which provides four different ride height settings including an 'Access' mode. These settings increase or decrease the height and ground clearance of your vehicle to cope with different driving conditions. The four height settings are as follows:

- Off-road height.
- Standard height.
- Motorway height (not user selectable).
- Access height.

For a more detailed description of the different height settings, please refer to the relevant passages later in this section.

Before operating EAS
Remember, even if a change of ride height is selected, it will NOT take place if any door is open.

NOTE: *Frequent changes between ride heights could cause the compressor to overheat. If this occurs, EAS will be fully operational again after a few minutes when the compressor has cooled.*

1. Ride height selector
Push the switch up or down to raise or lower the vehicle to the next ride height setting.

2. Ride height indicator panel
When the vehicle is at a particular ride height, the corresponding indicator light illuminates. If a new ride height is selected, the current indicator light remains illuminated and the indicator light for the new setting flashes, until the new height is reached (the original indicator light extinguishes). If the current ride height indicator light flashes when a new height is selected, the new ride height is invalid and the height change will not be performed.

3. Suspension inhibit switch
Press to select inhibit mode (not operational at Off-road height), the indicator light in the switch illuminates. This prevents automatic or manual changes between ride heights. Press again to cancel inhibit mode.

Access height switch
Press to lower the vehicle to access height, for easier loading/unloading. See *'ACCESS HEIGHT', page 164*, for further information.

MOTORWAY HEIGHT

At high speeds, the suspension is automatically lowered to motorway height to improve ride quality and vehicle handling at motorway speeds. The motorway height setting is approximately 0.8 inches (20 mm) below the standard ride height setting.

The motorway height setting is activated automatically when the electronic air suspension system detects the vehicle being driven at more than 60 mph (100 km/h), for more than 30 seconds.

When the system detects that the vehicle speed has fallen below 45 mph (70 km/h) for more than one minute, the vehicle automatically rises to the standard height setting. If the vehicle comes to rest while still at motorway height, the vehicle will not rise unnecessarily.

If the inhibit button is pressed while in motorway height, the vehicle will not automatically rise to standard height when the vehicle speed falls. Motorway height will be maintained until the inhibit switch is pressed for a second time, when normal automatic height adjustment is resumed.

Motorway height selection is fully automatic and cannot be selected manually by the driver.

From motorway height, the driver can manually select standard height, by rotating the ride height selector up. If the vehicle is travelling at less than 15 mph (25 km/h) the vehicle can be lowered to access height by rotating the ride height selector down.

OFF-ROAD HEIGHT

At low speeds, the vehicle height can be raised to increase ground clearance for when driving off-road.

WARNING

DO NOT select off-road height while driving on the road, or when the suspension has been lowered below standard ride height - any sudden or unexpected change to the vehicle's height or attitude could cause an inexperienced driver to lose control, or disturb the load/weight distribution within the vehicle.

DO NOT attempt to select off-road height while towing.

To select off-road height, ensure the vehicle is travelling at less than 30 mph (50 km/h) and then rotate the ride height selector clockwise. The vehicle will be raised to 2 inches (50 mm) above the standard ride height and the appropriate light on the ride height indicator panel will illuminate.

NOTE: *The front axle will be raised 10 mm higher than the rear axle.*

The vehicle will stay at off-road height until either standard ride height is selected using the ride height selector, or the vehicle speed exceeds 30 mph (50 km/h).

If the vehicle speed is too high when off-road height is selected, the standard ride height indicator will flash to indicate that the request has not been performed. Reduce the vehicle speed to below 30 mph (50 km/h) and then select off-road height.

NOTE: *Off-road height can NOT be selected if the inhibit switch is on and the inhibit function can not be selected while at off-road height.*

ACCESS HEIGHT

Access height lowers the vehicle to 1.6 inches (40 mm) below standard ride height and improves accessibility (for passengers and luggage).

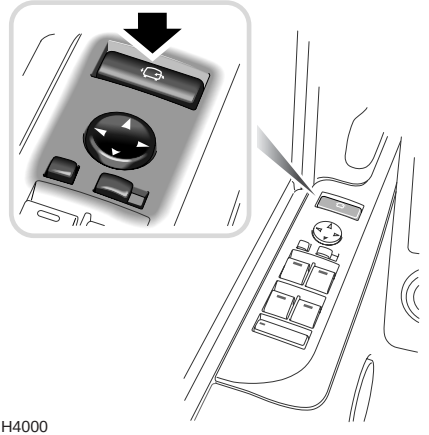

H4000

Access height can be selected when in any ride height, by either pushing the ride height selector down when in standard or motorway ride height, or by pressing the access height switch on the driver’s door switch panel (arrowed above).

Access height can be selected when the vehicle is travelling at less than 50 mph (80 km/h). The access height indicator light will start flashing, but EAS will not start to lower the vehicle to access height until the vehicle speed drops to below 15 mph (25 km/h). If the vehicle does not come to a rest within 65 seconds after the access height preselect was requested, or the vehicle speed rises above 50 mph (80 km/h), the access request is cancelled and the indicator light stops flashing. Access will need to be reselected if required.

NOTE: *If the vehicle speed increases to more than 20 mph (30 km/h), when the vehicle is at access height, the EAS will automatically reselect standard ride height.*

If the vehicle is travelling at above 50 mph (80 km/h) when access preselect is requested, the standard ride height indicator light flashes to indicate that the request has not been performed.

Access mode should only be selected whilst the vehicle is moving. In extreme circumstances, if it is necessary to select access height whilst the vehicle is stationary, 'N' (neutral) should be selected and the parking brake applied. Note that some noise from the suspension may be heard, accompanied by vibrations as the track and wheelbase of the vehicle change .

Crawl mode

If it is necessary to manoeuver the vehicle in an area where height is restricted, Crawl mode should be selected as follows:

- Select access height and if the vehicle is still moving, stop so that access height is achieved.
- Press the inhibit switch.

NOTE: *If the inhibit switch is pressed before the vehicle starts lowering to access height (i.e before the vehicle speed drops below 15 mph (25 km/h), the access request is cancelled and the vehicle will return to standard height.*

The vehicle is now in crawl mode and all manual and automatic height changes are inhibited, provided the vehicle does not exceed 25 mph (40 km/h).

If the vehicle speed exceeds 20 mph (30 km/h), a message appears in the message center (accompanied by a warning chime) warning the driver to keep the vehicle speed low.

CAUTION: If vehicle speed exceeds 25 mph (40 km/h) when in crawl mode, the mode is cancelled and the vehicle will rise to standard ride height. If the vehicle is still in an area of restricted height, this could seriously damage and trap the vehicle.

TOWING A TRAILER

When the electrical plug for a trailer attachment is connected to the vehicle socket, the EAS controller acts as though the inhibit button is activated. The only height change which is accepted is a return to standard height, if the vehicle is not already at standard height. The standard height indicator light and the inhibit light are illuminated. Once standard height is reached, no other ride height change will be available.

WARNING

If the vehicle is at any ride height other than standard height, when a trailer is fitted, trailer weight distribution and balance may be affected when the vehicle returns to standard height.

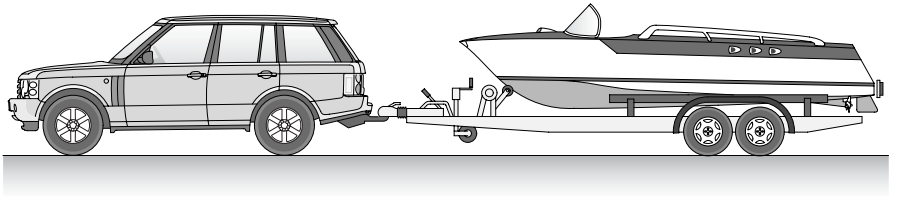

H4924

TOWING

The torque ranges of Land Rover engines allow maximum-weight loads to be pulled smoothly from standstill, and reduce gear changing on hills or rough terrain. A smooth start will be achieved with trailers over 4400 lb (2000 kg) by moving off in low range then changing to high range while on the move.

The suspension will automatically be set to standard height when the towing electrical socket is utilised and is designed to cope with a heavy trailer load without upsetting the balance or feel of the vehicle.

WARNING

To preserve the vehicle's handling and stability, only fit towing accessories that have been designed and approved by Land Rover.

The trailer tongue weight, plus the combined weight of the vehicle's load-carrying area and passengers, must never exceed the specified maximum rear axle load or the gross vehicle weight rating.

DO NOT exceed the gross weight or axle loads stated on the certification label attached to the vehicle. Exceeding allowable vehicle and axle loads will increase the risk of tire or suspension failure, increase vehicle brake stopping distance, and adversely affect vehicle handling and stability which may result in a crash or rollover.

DO NOT use lashing eyes or vehicle recovery towing eyes to tow a trailer or caravan.

It is the driver's responsibility to ensure that the towing vehicle and trailer are loaded and balanced so that the combination is stable when in motion. When preparing your vehicle for towing, pay attention to any instructions provided by the trailer/caravan manufacturer as well as to the information that follows.

Balancing the combination

To ensure optimum stability, it is essential that the trailer adopts a level aspect. In other words, the trailer must be level with the ground, with the towing hitch and trailer drawbar set at the same height (note the illustration at the top of the page). This is particularly important when towing twin axle trailers!

- The trailer should be level with the ground when loaded.
- The height of the drawbar hitch point should be set so that the trailer is level when connected to the loaded vehicle.

Trailer hitch*

The optional trailer hitch recever is rated as a Class III. When selecting a drawbar for the receiver, the following dimensions must be adhered to:

A. The hitch length must not exceed 11 in.(280 mm) measured from the connecting pin of the receiver.

B. The drop height must not be less than 2.5 in. (63 mm), measured from the top of the receiver.

C. The drop height must not be more than 5.5 in. (140 mm), measured from the top of the receiver.

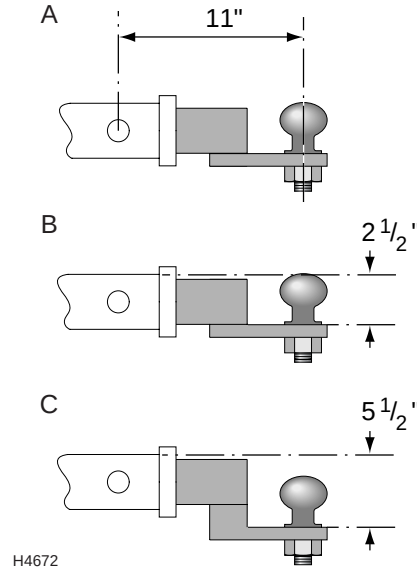

Towing guidelines

When preparing your vehicle for towing, pay careful attention to the trailer manufacturer's recommendations and observe the following guidelines:

- Ensure that the towing vehicle tire pressures are correct and that the trailer tire pressures are as recommended by the trailer manufacturer.
- Within the limits quoted, choose a draw bar that allows for a level attitude of the trailer and vehicle.
- Check the operation of trailer brakes and lights.
- For maximum stability, ensure that loads are properly secured and unable to shift position during transit. Also, position loads so that most of the weight is placed close to the floor and, where possible, immediately above or close to the trailer axle(s).
- After loading the trailer, check that the weight on the hitch point (this is called the tongue weight, or nose weight), is in accordance with both the trailer manufacturer's recommendations, and the requirements in this Handbook.
- When calculating the laden weight of the trailer, remember to include the weight of the trailer PLUS THE LOAD.
- Where the load weight can be divided between trailer and tow vehicle, loading more weight into the vehicle will generally improve the stability of the combination.

NOTE: *It is the driver's responsibility to ensure that all regulations with regard to towing are complied with according to the state in which the vehicle is being operated. All relevant information should be obtained from an appropriate motoring organization or towing equipment retailer.*

NOTE: *When towing trailers, always consult and obey local speed regulations. Speed should be reduced to compensate for increased stopping distances.*

Gear range selection

To avoid overheating the gearbox, it is not advisable to tow heavy trailer loads at speeds of less than 20 mph (32 km/h) using the main gearbox in high range. Select low range instead.

Trailer socket

When the engine is running, power output from the trailer socket must NOT exceed 5 amps.

If it is required to exceed 5 amps, consult your Land Rover retailer.

Vehicle weights

When loading a vehicle to its maximum (gross vehicle weight), take account of the unladen vehicle weight and load distribution to ensure that axle loadings do not exceed the permitted maximum values.

It is your responsibility to limit the vehicle load in such a way that neither the maximum axle loads nor the gross vehicle weight are exceeded.

WARNING

In the interest of safety, maximum trailer weight and tongue weights must not be exceeded, see 'TOWING WEIGHTS', page 280

ESSENTIAL TOWING CHECKS	
Tire pressures:	Increase rear pressures of towing vehicle by at least 3 lbf/in^2 (21 kPa) up to maximum of 44 lbf/in^2 (302 kPa). Ensure trailer/caravan tires are at recommended pressures.
Loading:	Keep trailer loads securely anchored, evenly distributed and as low as possible with heavy loads over the axle. Towing vehicle maximum axle weights and gross vehicle weight must not be exceeded.
Tongue weight:	If the vehicle is loaded to the Gross Vehicle Weight (GVW), the tongue weight is limited to 330 lb (150 kg). If a greater tongue weight is necessary (up to 550 lb (250 kg) maximum), vehicle loading should be adjusted to ensure the GVW and rear axle weights are not exceeded - see *'TOWING WEIGHTS', page 280*, for further information.
Hitch height:	Must be set so that caravan/trailer is level when connected to the tow vehicle with engine running.

WARNING

The tongue weight plus the combined weight of the vehicle's load-carrying area and rear seat passengers must never exceed the specified maximum rear axle load (see 'TOWING WEIGHTS', page 280).

WARNING

DO NOT exceed the gross weight or axle loads stated on the certification label attached to the vehicle. Exceeding allowable vehicle and axle loads will increase the risk of tire or suspension failure, increase vehicle brake stopping distance, and adversely affect vehicle handling and stability which may result in a crash or rollover.

IMPORTANT INFORMATION

For all of the towing conditions described, it is important that the following points are observed:

- All loads in the vehicle should be distributed as far forward as possible.
- The maximum Gross Vehicle Weight must not be exceeded, see *'TOWING WEIGHTS', page 280*.
- The maximum individual axle weights must not be exceeded, see *'TOWING WEIGHTS', page 280*.
- Changes between high and low range should not be made while the vehicle is on the move.
- Total trailer weight and tongue load can be measured with platform scales found at highway weighing stations, building supply companies, etc.

LUGGAGE ANCHOR POINTS

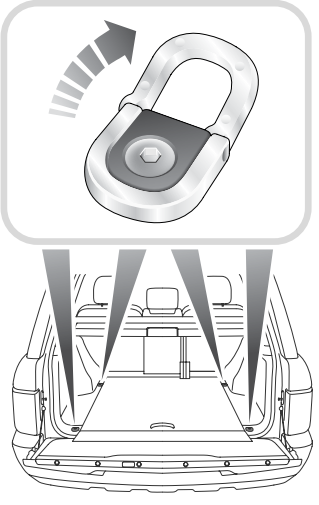

H4185

Four fixing points are provided in the rear luggage compartment floor, to assist in safely securing large items of luggage. Land Rover provides a range of approved luggage retention accessories.

WARNING

DO NOT carry unsecured equipment, tools or luggage which could move and cause personal injury in the event of an accident or emergency manoeuver either on or off-road.

ROOF RACKS

A range of roof rack systems is available as Land Rover approved accessories. For further information about roof rack systems approved for use with your vehicle and advice as to which system would suit your requirements best, please consult your Land Rover retailer.

WARNING

- ***The MAXIMUM load for approved roof rack systems is 220 lb (100 kg) for normal road use and 110 lb (50 kg) off-road. The above weights include the mass of the roof rack system.***
- ***Only fit roof racks that have been designed for your vehicle. If in doubt, consult your retailer.***
- ***A loaded roof rack can reduce the stability of the vehicle, particularly when cornering and encountering cross winds.***
- ***All loads should be evenly distributed, side to side, with any weight bias towards the front of the roof rack system.***
- ***Ensure all loads are secured within the periphery of the roof rack system.***
- ***Check to ensure the roof rack and load are secure after 30 miles (50 km) of any journey.***
- ***Driving off-road with a loaded roof rack is not recommended. If it is necessary to stow luggage on the roof rack while driving off-road, all loads must be removed before traversing side slopes.***

WARNING

To avoid the risk of personal injury or death, DO NOT permit children or any other person to travel on the roof rack (or any access ladder) whilst the vehicle is in motion.

See *'VEHICLE WEIGHTS', page 279*.

BI-XENON LIGHT UNITS

WARNING

- ***Used xenon light units contain mercury, which is hazardous and can be injurious to health.***
- ***The xenon system generates up to 28 000 volts and contact with this voltage could lead to a fatality. Ensure that headlights are switched off and switch off the starter switch before working on the system.***
- ***Replacement or maintenance of xenon lights should be carried out only by qualified personnel.***

Vehicles fitted with Bi-Xenon headlight units use a halogen bulb for the high beam and a xenon bulb for both enhanced high beam and for normal beam. A solenoid-operated shutter changes the direction of the xenon light beam to give either normal or enhanced high beam.

The operational life of a Bi-Xenon light is significantly longer than that of a conventional or halogen bulb.

Bi-Xenon lights (A) provide significantly improved visibility over halogen lights (B), especially during adverse weather conditions.

See *'Bi-xenon light units', page 255*.

Seek advice about the proper disposal of Bi-Xenon light units from a Land Rover retailer.

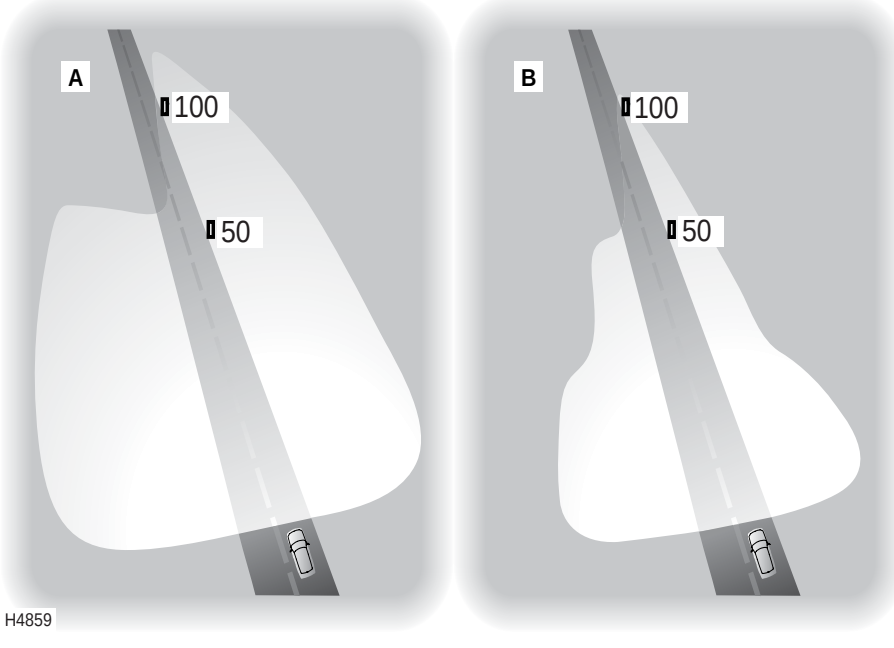

Off-road Driving

Off-road Driving

BEFORE YOU DRIVE 175
BASIC OFF-ROAD TECHNIQUES 176
AFTER DRIVING OFF-ROAD. 178
SERVICING REQUIREMENTS. 178
REMOVING THE FRONT BIB SPOILER. 179

Driving Techniques

DRIVING ON SOFT SURFACES & DRY SAND . . 180
DRIVING ON SLIPPERY SURFACES
(ice, snow, mud, wet grass). 180
DRIVING ON ROUGH TRACKS. 180
CLIMBING STEEP SLOPES 181
DESCENDING STEEP SLOPES. 182
TRAVERSING A SLOPE 183
NEGOTIATING A ‘V’ SHAPED GULLY. 183
DRIVING IN EXISTING WHEEL TRACKS 183
CROSSING A RIDGE 184
CROSSING A DITCH 184
WADING 185

BEFORE YOU DRIVE

Before venturing off-road, it is **absolutely essential** that inexperienced drivers become fully familiar with the vehicle's controls, in particular the transfer gear switch and Hill Descent Control (HDC), and also study the off-road driving techniques described on this and the following pages.

WARNING

Off-road driving can be hazardous!

- ***DO NOT take unnecessary risks and be prepared for emergencies at all times.***
- ***Your Range Rover has a higher ground clearance and hence a higher center of gravity than an ordinary passenger car. An abrupt manoeuver at an inappropriate speed or on an unstable surface could cause the vehicle to go out of control or rollover.***
- ***Familiarize yourself with the recommended driving techniques in order to reduce risks to yourself, your vehicle AND your passengers.***
- ***Always ensure that seat belts are worn for personal protection while driving on-road or off-road.***
- ***DO NOT drive off-road alone or without letting someone know where you are going and when you plan to return.***

IMPORTANT INFORMATION

- DO NOT drive if the fuel level is low - undulating ground and steep inclines could cause fuel starvation to the engine and consequent damage to the catalytic converter.
- DO NOT stop the engine while driving through water (wading) - water ingress to the exhaust tailpipe could result in severe damage to the catalytic converter.
- As a precaution against accidental loss, remove the towing eye cover and the front spoiler before driving off-road (see *'TOWING EYES', page 246*).
- To prevent damage, and improve departure angles, remove and stow any towing equipment fitted to the vehicle.

BASIC OFF-ROAD TECHNIQUES

These basic driving techniques are an introduction to the art of off-road driving and do not necessarily provide the information needed to successfully cope with every single off-road situation, including off-road recovery techniques.

We strongly recommend that owners who intend to drive off-road frequently, should seek as much additional information and practical experience as possible.

Before driving off-road it is important that you check the condition of the wheels and tires and that the tire pressures are correct. Worn or incorrectly inflated tires will adversely affect the performance, stability and safety of the vehicle.

Gear selection

With the main selector lever set at ‘D’, the gearbox automatically provides the correct gear for the appropriate gear range selected (HIGH or LOW). For greater vehicle control through gear selection, manual CommandShift mode is recommended.

HIGH range gears should be used whenever possible - only change to LOW range when ground conditions become very difficult.

Braking

As far as possible, vehicle speed should be controlled through correct gear selection and the use of Hill Descent Control (HDC). Application of the brake pedal should be kept to a minimum. In fact, if the correct gear and HDC have been selected, braking will be largely unnecessary.

If the brake pedal is depressed when HDC is active, HDC is overridden and the brakes will perform as normal. If the brake pedal is then released, HDC will recommence operating, at reduced speed.

Use of engine for braking

Before descending steep slopes, stop the vehicle at least its length before the descent, engage LOW range and then select HDC. Use of manual CommandShift gear selection to limit the transmission to lower gears will also increase engine braking. Select ‘1’ or ‘2’ LOW range, depending on the severity of the descent.

While descending a slope (either forwards or in ‘R’ - reverse) it should be remembered that HDC and the engine will provide sufficient braking effort to control the rate of descent, and that the brakes should not be applied.

Accelerating

Use the accelerator with care - any sudden surge of power may induce wheel spin and, therefore, invoke unnecessary operation of traction control, or in extreme conditions could lead to loss of control of the vehicle.

Survey the ground before driving

Before negotiating difficult terrain, it is wise to carry out a preliminary survey on foot. This will minimise the risk of your vehicle getting into difficulty through a previously unnoticed hazard.

Steering

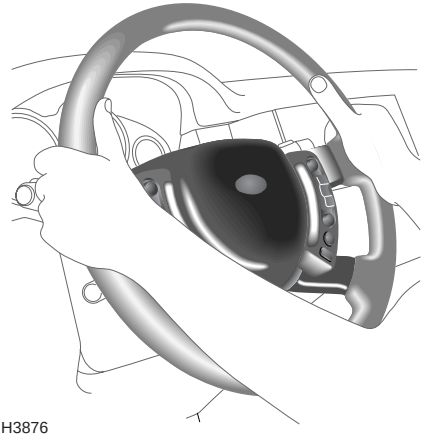

H3876

WARNING

DO NOT hold the steering wheel with your thumbs inside the rim - a sudden 'Kick' of the wheel as the vehicle negotiates a rut or boulder could seriously injure them. ALWAYS grip the wheel on the outside of the rim (as shown) when traversing uneven ground.

Ground clearance

Don't forget to allow for ground clearance beneath the vehicle suspension components and under the front and rear bumpers. Note also that there are other parts of the vehicle which may come into contact with the ground - take care not to ground the vehicle.

Ground clearance is particularly important at the bottom of steep slopes, or where wheel ruts are unusually deep and where sudden changes in the slope of the ground are experienced.

ALWAYS attempt to avoid obstacles that may foul the vehicle.

Electronic air suspension

Select 'Off-road height', to increase approach/departure angles and ground clearance (see *'ELECTRONIC AIR SUSPENSION (EAS)', page 162*).

Loss of traction

If the vehicle is immobilised due to loss of wheel grip, the following hints could be of value:

- Remove obstacles rather than forcing the vehicle to cross them.
- Clear clogged tire treads.
- Reverse as far as possible, then attempt an increased speed approach - additional momentum may overcome the obstacle.
- Brushwood, sacking or any similar material placed in front of the tires may improve tire grip.

CD Autochanger

Playing CDs while negotiating arduous off-road terrain is not recommended. Severe jolting of the vehicle may disturb the operation of the autochanger, causing the disc to 'jump' or 'skip'.

AFTER DRIVING OFF-ROAD

WARNING

Before rejoining the public highway, or driving at speeds above 25 mph (40 km/h), consideration should be given to the following:

- ***Wheels and tires must be cleaned of mud and inspected for damage - ensure that there are no lumps or bulges in the tires or exposure of the ply or cord structure.***
- ***If wheels and tires are not cleaned properly, damage to the wheels, tires, braking system and suspension components could occur.***
- ***Brake discs and callipers should be examined and any stones or grit that may affect braking efficiency removed.***
- ***The underside of the vehicle should be checked for damage, especially the suspension air springs and dampers.***
- ***Any damage to paint or protective coatings, should be rectified by a Land Rover retailer as soon as possible.***

If you have any doubt whether the vehicle has been damaged, have the vehicle inspected by a Land Rover retailer.

SERVICING REQUIREMENTS

Vehicles operated in arduous conditions, particularly on dusty, muddy or wet terrain, and vehicles undergoing frequent or deep wading conditions will require more frequent servicing. See *'OWNER MAINTENANCE', page 195* and contact a Land Rover retailer for advice.

After wading in salt water or driving on sandy beaches, use a hose to wash the underbody components and any exposed body panels with fresh water. This will help to protect the vehicle's cosmetic appearance and help prevent corrosion.

REMOVING THE FRONT BIB SPOILER

To improve off-road performance, it is possible to remove the front bib spoiler from the vehicle - this will also prevent the spoiler from being damaged.

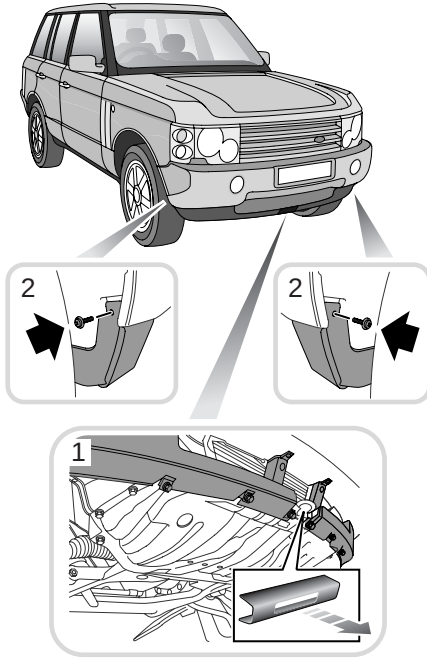

H4218

1. Remove the towing eye cover (see *'TOWING EYES', page 246*).
2. From inside the wheel arch, remove the bolt/washer securing the spoiler to the wheel arch liner. Repeat for the other side of the vehicle. Keep the bolts and washers in a safe place.

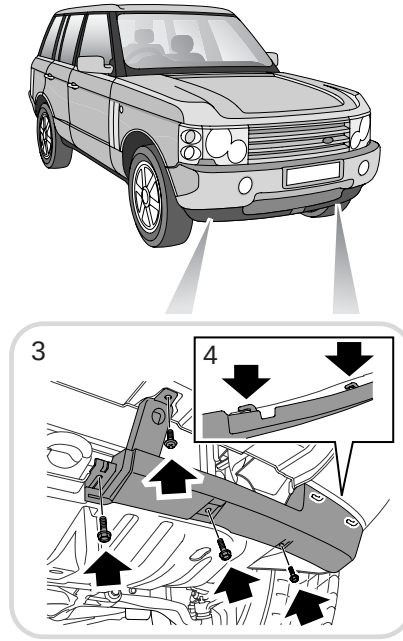

H4219

3. On one half of the spoiler, remove the three bolt/washers and one screw/washer securing the spoiler to the bumper. Keep the bolts, screw and washers in a safe place.
4. Slide the half-spoiler outwards towards the side of the vehicle and remove.

Repeat items 3 and 4 for the other half of the spoiler.

Refitting the spoiler is the reverse of the removal procedure.

WARNING

Ensure that the spoiler halves and the towing eye cover are securely stowed in the vehicle, so they do not become projectiles in the event of an accident or emergency manoeuver.

DRIVING ON SOFT SURFACES & DRY SAND

The ideal technique for driving on soft surfaces (dry sand for example) requires the vehicle to be kept moving at all times - soft sand causes excessive drag on the wheels resulting in a rapid loss of motion once driving momentum is lost.

Deactivate DSC (see *'DYNAMIC STABILITY CONTROL (DSC)', page 158*), then select 'D' (drive) and REMAIN in that gear until a firm surface is reached. It is generally advisable to use LOW range, as this will enable you to accelerate through worsening conditions without the risk of being unable to restart.

Stopping the vehicle on soft ground, in sand or on an incline

If you do stop the vehicle, remember:

- Starting on an incline or in soft ground or sand may be difficult. Always park on a firm level area, or with the vehicle facing downhill.
- To avoid wheel spin, select 'D' (drive) and use the MINIMUM throttle necessary to get the vehicle moving.
- If forward motion is lost, avoid excessive use of the throttle - this may dig the vehicle into the sand. Clear sand from around the tires and ensure that the vehicle underside is not bearing on the sand before again attempting to move.
- If the wheels have sunk, use an air bag lifting device or high lift jack to raise the vehicle, and then build up sand under the tires so that the vehicle is again on level ground. If a restart is still not possible, place sand mats or ladders beneath the tires.

DRIVING ON SLIPPERY SURFACES (ice, snow, mud, wet grass)

- Select 'D' (drive) in LOW range.
- Drive away using the MINIMUM throttle possible.
- Drive slowly at all times, keeping braking to a minimum and avoiding violent movements of the steering wheel.

DRIVING ON ROUGH TRACKS

Although rough tracks can sometimes be negotiated in normal drive, on very rough tracks, engage LOW range to enable a steady, low speed to be maintained without constant use of the brake pedal.

CLIMBING STEEP SLOPES

ALWAYS follow the fall line of the slope - travelling diagonally could encourage the vehicle to slide broadside down the slope.

Steep climbs will usually require the LOW gear range and selecting ‘3’ or ‘4’ using CommandShift selection is recommended. It is advisable to engage HDC, in case there is a need to reverse down the slope to avoid an obstacle. If the surface is loose or slippery, use sufficient speed in the highest practical gear to take advantage of your vehicle's momentum and disable DSC. However, too high a speed over a bumpy surface may result in a wheel lifting, causing the vehicle to lose stability. In this case try a slower approach. Traction can also be improved by easing off the accelerator just before loss of forward motion.

If the vehicle is unable to complete a climb, do not attempt to turn it around while on the slope. Instead, adopt the following procedure to reverse downhill to the foot of the slope.

1. Hold the vehicle stationary using both foot and hand brakes.
2. Restart the engine if necessary.
3. Engage ‘N’ (neutral) and engage LOW range, then select ‘R’ (reverse).
4. Select Hill Descent Control (HDC).
5. Release the parking brake. Then fully release the foot brake and allow the vehicle to reverse down the slope using engine braking and HDC to control the rate of descent.
6. Unless it is necessary to stop the vehicle to negotiate obstructions, DO NOT apply the brake during the descent - even a light application may cause the front wheels to lock, rendering the steering ineffective.
7. If the vehicle begins to slide, accelerate slightly to allow the tires to regain grip.

When the vehicle is back on level ground and safety permits, a faster approach will probably enable the hill to be climbed. However, DO NOT take unnecessary risks, if the hill is too difficult to climb, find an alternative route.

WARNING

DO NOT attempt to reverse down a slope without the engine running and ensure that ‘R’ (reverse) is selected. Otherwise, HDC and the braking effect of the gearbox will be lost.

DESCENDING STEEP SLOPES

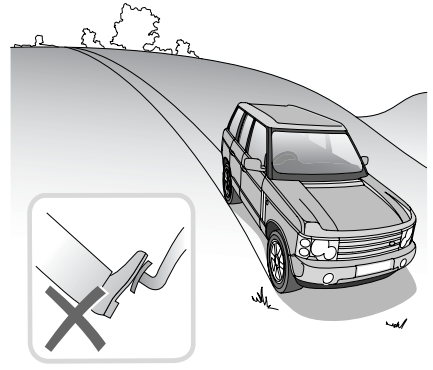

H3855

WARNING

Failure to follow these instructions may cause the vehicle to roll over.

- Slow the vehicle and select LOW range.
- With the transmission in manual CommandShift mode, change down the gears to select either '1' or '2', depending on the severity of the slope, before bringing the vehicle to a stop at least vehicle length before the start of the slope.
- Select Hill Descent Control (HDC).
- Unless it is necessary to stop the vehicle in order to negotiate obstructions, **DO NOT** touch the brake pedal during the descent - the engine and HDC will limit the speed, keeping the vehicle under perfect control provided the front wheels are rotating.
- If the vehicle begins to slide, the limits of adhesion have been reached, and it may be impossible to maintain the minimum speed relative to the gear selected. In this case, HDC may automatically accelerate the vehicle sufficiently to maintain directional stability. DO NOT use the accelerator or the brakes or attempt to change gear. HDC will automatically slow the vehicle down again as soon as possible.
- Once the descent has been started, 'D' can be selected in the main gearbox. HDC will continue to operate and the previously selected manual 'gear' will be retained until the descent is complete.
- Once level ground is reached, the transmission will automatically select 'D' for the next stage of your journey.

TRAVERSING A SLOPE

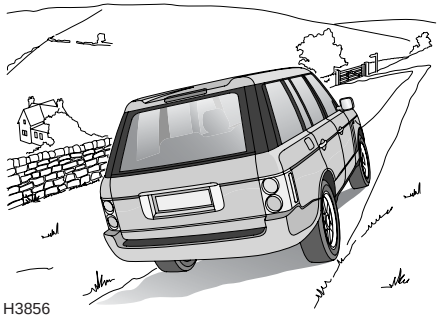

WARNING

Failure to follow these instructions may cause the vehicle to roll over.

Before crossing a slope ALWAYS observe the following precautions:

- Check that the ground is firm and not slippery.
- Check that the wheels on the downhill side of the vehicle are not likely to drop into depressions in the ground and that the 'uphill' wheels will not run over rocks, tree roots, or similar obstacles that could suddenly increase the angle of tilt.
- Ensure that passenger weight is evenly distributed, that all roof rack luggage is removed and that all other luggage is properly secured and stowed as low as possible. Always remember; any sudden movement of the load could cause the vehicle to overturn.
- Rear seat passengers should sit on the uphill side of the vehicle or, in extreme conditions, should vacate the vehicle until the sloping ground has been safely negotiated.

NEGOTIATING A 'V' SHAPED GULLY

Observe extreme caution! Steering up either of the gully walls could cause the side of the vehicle to be trapped against the opposite gully wall.

DRIVING IN EXISTING WHEEL TRACKS

As far as possible allow the vehicle to steer itself along the bottom of the ruts and always keep a light hold of the steering wheel to prevent it from spinning free. Deactivation of DSC may help in deep ruts.

Particularly in wet conditions, if the steering wheel is allowed to spin free, the vehicle may appear to be driving straight ahead in the ruts, but in actual fact (due to the lack of traction caused by the wet ground) is unknowingly on full right or left lock. Then, when level ground is reached, or if a dry patch of ground is encountered, the wheels will find traction and cause the vehicle to suddenly veer to left or right.

CROSSING A RIDGE

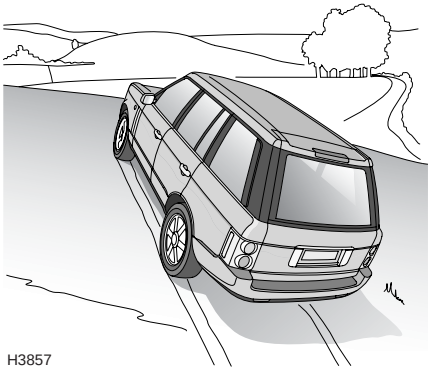
H3857

Approach at right angles so that both front wheels cross the ridge together - an angled approach could cause stability to be lost through diagonally opposite wheels lifting from the ground at the same time.

CROSSING A DITCH

H3858

Cross ditches at an angle so that three wheels always maintain contact with the ground. If a ditch is approached head on, both front wheels will drop into the ditch together, possibly resulting in the chassis and front bumper being trapped on opposite sides of the ditch. If the severity of terrain makes this inevitable, selecting ‘Off-road’ height with the EAS to increase clearance between the ground and the bottom of the vehicle may help.

WADING

WARNING

The maximum advisable wading depth is 20 inches (0.5m). Wading at a depth greater than the maximum advisable wading depth regularly, is not recommended.

Severe electrical damage may occur if the vehicle remains stationary for any length of time when the water level is above the door sills.

Severe damage to the catalytic converter could occur if the engine is stopped for any length of time when the water level is above the exhaust tailpipe.

Before wading, ensure the electronic air suspension is set to off-road height.

If the water is likely to exceed 20 inches (0.5 m), the following precautions should be observed:

- Fix a plastic sheet in front of the radiator grille to prevent water from soaking the engine and mud from blocking the radiator.
- Remove the CD autochanger.
- Ensure that the silt bed beneath the water is free of obstacles and firm enough to support the vehicle's weight and provide sufficient traction.
- Ensure that the engine air intake (located on the front wings) is clear of the water level.
- Drive slowly into the water and accelerate to a speed which causes a bow wave to form; then maintain that speed.

At all times, keep all the doors fully closed.

NOTE: *If deep wading is to be carried out regularly, contact your Land Rover retailer for advice.*

After wading

- Drive the vehicle a short distance and apply the foot brake to check that the brakes are fully effective.
- DO NOT rely on the parking brake to hold the vehicle stationary until the brakes have thoroughly dried out; in the meantime, leave the vehicle parked in ‘P’.
- Remove any protective covering from in front of the radiator grille.
- If the water was particularly muddy, remove any blockages (mud and leaves) from the condenser and radiator to reduce the risk of overheating.
- If deep water is regularly negotiated, check all oils for signs of water contamination - contaminated oil can be identified through its ‘milky’ appearance. In addition, check the air filter element for water ingress and replace if wet - consult a Land Rover retailer if necessary.
- If salt water is frequently negotiated, thoroughly wash the underbody components and exposed body panels with fresh water.

NOTE: *Vehicles required to undergo frequent or deep wading conditions will require more frequent servicing. Contact a Land Rover retailer for advice.*

On-Road Driving

On-Road Driving

INSTRUMENTS AND WARNING LIGHTS 189
POWER ASSISTED STEERING 189
WARMING UP 189
VEHICLE HEIGHT 189
DRIVING PRECAUTIONS 190
FUEL ECONOMY 191
BREAKDOWN SAFETY 191

INSTRUMENTS AND WARNING LIGHTS

Before driving it is important to fully understand the function of the instruments and warning lights (see *'INSTRUMENT PANEL', page 73*).

NOTE: *Red warning lights are of particular importance, illumination indicating that a fault exists. If a red light illuminates, always stop the vehicle and seek qualified assistance before continuing.*

POWER ASSISTED STEERING

The hydraulic power-assisted steering is progressively geared; when steering straight ahead gearing is relatively low, but becomes progressively higher as the steering wheel is turned.

NOTE: *Power assistance is dependent on the engine running. If the engine is not running, a much greater effort will be required to steer the vehicle.*

WARMING UP

In the interests of fuel economy, it is advisable to drive the vehicle straight away, remembering that harsh acceleration or labouring the engine before the normal operating temperature has been reached can damage the engine.

When the engine is cold, engine idle speeds will be faster than normal. Under these circumstances, use the foot brake to control the vehicle until the engine is warm and running at normal speed, and be aware of the need to take additional care when manoeuvring the vehicle.

VEHICLE HEIGHT

CAUTION: The overall height of your vehicle exceeds that of ordinary passenger cars. Always be aware of the height of your vehicle and check the available headroom before driving through low entrances. This is particularly important if the vehicle is fitted with a roof rack or if a sunroof is open.

DRIVING PRECAUTIONS

WARNING

Utility vehicles have a significantly higher roll-over rate than other types of vehicles. Since these vehicles are designed to be operated off-road, these vehicles have a higher ground clearance and hence a higher center of gravity. Such a feature has been associated with an increased risk of vehicle roll-over. An advantage associated with higher ground clearance vehicles is a better view of the road, allowing the driver to anticipate problems. Another factor shown to significantly increase roll-over risk is unauthorized vehicle modifications such as fitting incorrect specification tires (see 'WHEELS & TIRES', page 276), oversize tires, body lifting, incorrect springs/dampers, incorrect vehicle loading/trailer towing.

However, on-road crash data also indicates that driver behaviour is a greater factor than a high center of gravity in determining a vehicle's overall roll-over rate. The single most effective driver behaviour that can reduce the risk of injury or death in all crashes including roll-over, is to ALWAYS WEAR YOUR SEAT BELT and to properly restrain all child passengers in the rear seat in an appropriate child safety seat. In a rollover crash, an unbelted person is significantly more likely to die than a person wearing a seat belt.

Other measures that can reduce the risk of injury and death from vehicle crashes and roll-over are:

- Limit speed. Posted speed limits should never be exceeded, and you should always drive below these limits whenever traffic, weather, road or other conditions dictate. Always use your common sense and good judgement.
- Take curves at reasonable speeds, avoiding unnecessary braking.
- Drive defensively. Be aware of traffic, road and weather conditions. Avoid risk taking behaviour such as following too close, rapid lane changing or abrupt manoeuvers.
- Assume that pedestrians or other drivers are going to make mistakes. Anticipate what they might do. Be ready for their mistakes.
- Avoid distractions such as cellular phone calling, reading, eating, drinking or reaching for items on the floor.
- Before changing lanes, check your mirrors and flash your turn signal lights.
- Always leave room for unexpected events such as sudden braking.
- Never operate your vehicle when you have consumed alcohol, are sleepy or fatigued or have taken any medications that affect judgement, reflexes or alertness.
- Many vehicle rollovers occur when a driver attempts to bring a vehicle back onto the road after some or all of the wheels drift onto the shoulder of the road, especially when the shoulder is unpaved. If you find yourself in such a situation, do not initiate any sharp or abrupt steering and/or braking manoeuvers to re-enter the roadway. Instead, let the vehicle slow down as much as safely possible before attempting to re-enter the roadway and keep your wheels as straight as possible while re-entering the roadway.

FUEL ECONOMY

Fuel consumption is influenced by two major factors:

- How your vehicle is maintained.
- How you drive your vehicle.

To obtain optimum fuel economy, it is essential that your vehicle is maintained in accordance with the manufacturer's service schedule.

Items such as the condition of the air cleaner element, tire pressures and wheel alignment will have a significant effect on fuel consumption. But, above all, the way in which you drive is most important. The following hints may help you to obtain better value from your motoring:

- Avoid unnecessary, short, start-stop journeys.
- Avoid fast starts by accelerating gently and smoothly from rest.
- Do not drive in the lower gears for longer than necessary.
- Decelerate gently and avoid sudden and heavy braking.
- Anticipate obstructions and adjust your speed accordingly well in advance.
- When stationary in traffic, select neutral to improve fuel economy and air conditioning performance.

BREAKDOWN SAFETY

IMPORTANT INFORMATION

Remember the breakdown safety code

If a breakdown occurs while travelling:

- Wherever possible, consistent with road safety and traffic conditions, the vehicle should be moved off the main thoroughfare, preferably onto the shoulder as far as possible. If a breakdown occurs on a motorway, pull well over to the inside of the hard shoulder.
- Switch on hazard lights.
- If possible, position a warning triangle or a flashing amber light at an appropriate distance from the vehicle to warn other traffic of the breakdown, (note the legal requirements of some countries).
- Consider evacuating passengers through the doors facing away from traffic, to a safe area away from the vehicle, as a precaution in case your Range Rover is accidentally struck by another vehicle.

Owner Maintenance

Maintenance

ROUTINE MAINTENANCE 195
OWNER MAINTENANCE. 195
SAFETY IN THE GARAGE 196
PREPARATION FOR WINTER. 197
EMISSION CONTROL. 197
ROAD TESTING DYNAMOMETERS
(‘rolling roads’) 197

Hood Opening

HOOD OPENING. 198

Engine Compartment

FLUID RESERVOIR LOCATIONS 199

Engine Oil

CHECK & TOP-UP 200
DRAIN & REFILL 201

Air Cleaner

ELEMENT RENEWAL 204

Spark Plugs

SPARK PLUG REMOVE & REFIT 205

Cooling System

COOLANT CHECK AND TOP-UP. 208
ANTI-FREEZE. 209

Brakes

BRAKE FLUID. 210

Power Steering

POWER STEERING FLUID 211

Washers

WINDSHIELD WASHERS. 212
HEADLIGHT WASHERS 213

Wiper Blades

WIPER BLADE REPLACEMENT 214

Battery

BATTERY SAFETY 215

BATTERY MAINTENANCE 215

Tires

CARING FOR YOUR TIRES 217
UNIFORM TIRE QUALITY GRADING 220
SNOW CHAINS 222

Cleaning & Vehicle Care

WASHING YOUR VEHICLE 223
CLEANING THE INTERIOR 225

Identification Numbers

VEHICLE IDENTIFICATION NUMBER (VIN) 227

Parts & Accessories

PARTS AND ACCESSORIES 228

ROUTINE MAINTENANCE

Regular systematic maintenance is the key to ensuring the continued reliability and efficiency of your vehicle.

Maintenance is the owner's responsibility and you must ensure that owner maintenance operations, oil services, inspections and brake fluid and coolant changes are carried out when required and according to the manufacturer's recommendations.

The routine maintenance requirements for your vehicle are shown in the Passport to Service book. Most of this necessary workshop maintenance requires specialised knowledge and equipment, and should preferably be entrusted to a Land Rover retailer.

Passport to Service

The Passport to Service book includes a Service Record section, which enables a record to be kept of all the oil services and inspections that are carried out on the vehicle. This section of the book also provides a facility for the retailer to record brake fluid changes, as well as the fitting of replacement airbag modules.

Ensure your retailer signs and stamps the book after each oil service and inspection.

Brake fluid/component replacement

Brake fluid must be completely renewed every 3 years, regardless of distance travelled.

Coolant replacement

The engine coolant (anti-freeze and water solution) needs to be replaced every 4 years, regardless of distance travelled. Your retailer will replace the coolant at the scheduled oil service.

OWNER MAINTENANCE

In addition to the routine services and inspections referred to previously, a number of simple checks must be carried out more frequently. You can carry out these checks yourself and advice is given on the pages that follow.

Any significant or sudden drop in fluid levels, or uneven tire wear, should be reported to a retailer without delay.

Daily checks

- Operation of lights, horn, direction indicators, wipers, washers and warning lights.
- Operation of seat belts and brakes.
- Look for fluid deposits underneath the vehicle that might indicate a leak (condensation drips from the air conditioning are normal).

Weekly checks

- Engine oil level.

  NOTE: *The engine oil level should be checked more frequently if the vehicle is driven for prolonged periods at high speeds.*
- Brake fluid level.
- Power steering fluid level.
- Windshield washer fluid level.
- Tire pressures and condition.
- Operate air conditioning.

All fluid specifications and capacities are shown in *'LUBRICANTS AND FLUIDS', page 271*.

WARNING

If brake pedal travel is unusually long or if there is any significant loss of brake fluid, contact your retailer immediately. Driving under such conditions could result in extended stopping distances or complete brake failure.

Driving in arduous conditions

IMPORTANT INFORMATION

Special operation conditions
When a vehicle is operated in extremely arduous conditions, more frequent attention must be paid to servicing requirements.

For example: if your vehicle experiences deep wading conditions, even DAILY servicing could be necessary to ensure the continued safe and reliable operation of the vehicle.

Arduous driving conditions include:

- Repeated short distance driving (e.g. up to 6 miles (10 km), stop-start driving or idling for long periods.
- Driving in dusty and/or sandy conditions.
- Driving on rough and/or muddy roads and/or wading.
- Driving in extremely hot conditions.
- Towing a trailer or driving in mountainous conditions.

Contact a Land Rover retailer for advice.

SAFETY IN THE GARAGE

WARNING

Cooling fans may continue to operate after the engine is switched off. When the engine is hot, the cooling fans may also COMMENCE operating after the engine is switched off and continue operating for up to 10 minutes. To avoid injury, keep clear of all fans and remove any loose clothing while working in the engine compartment.

Whenever you need to carry out maintenance on your vehicle, observe the following safety precautions at all times:

- ***Keep your hands and clothing away from drive belts and pulleys.***
- ***If the vehicle has been driven recently, DO NOT TOUCH exhaust and cooling system components until the engine has cooled.***
- ***DO NOT TOUCH electrical leads or components while the engine is running, or with the starter switch turned on.***
- ***NEVER leave the engine running in an unventilated area - exhaust gases are poisonous and extremely dangerous.***
- ***DO NOT work beneath the vehicle with the wheel changing jack as the only means of support.***
- ***Ensure sparks and naked lights are kept away from the engine compartment.***
- ***Wear protective clothing, including, where practicable, gloves made from an impervious material.***
- ***Remove metal wrist bands and jewellery before working in the engine compartment.***
- ***DO NOT allow tools or metal parts of the vehicle to make contact with the battery leads or terminals.***

WARNING

Under no circumstances should any part of the fuel system be dismantled or replaced by anyone other than a suitably qualified motor vehicle technician. Failure to comply with this instruction may result in fuel spillage with a consequent serious risk of fire.

Poisonous fluids

Fluids used in motor vehicles are poisonous and should not be consumed or brought into contact with open wounds. These include; battery acid, anti-freeze, brake and power steering fluid, gasoline, engine oil and windshield washer additives.

For your own safety, ALWAYS read and obey all instructions printed on labels and containers.

Used engine oil

Prolonged contact with engine oil may cause serious skin disorders, including dermatitis and cancer of the skin. ALWAYS wash thoroughly after contact.

It is illegal to pollute drains, water courses or soil. Use authorised waste disposal sites to dispose of used oil and toxic chemicals.

PREPARATION FOR WINTER

Before the onset of winter, to prevent the door seals from freezing closed, apply Land Rover silicone spray to the flocked seals across the tops of the doors.

This action will need to be repeated at the start of each winter to maintain protection.

EMISSION CONTROL

Your vehicle is fitted with various items of emission and evaporative control equipment designed to meet specific territorial requirements. You should be aware that unauthorised replacement, modification or tampering with this equipment by an owner or repair shop may be unlawful and subject to legal penalties.

In addition, engine settings must not be tampered with. These have been established to ensure that your vehicle complies with stringent exhaust emission regulations. Incorrect engine settings may adversely affect exhaust emissions, engine performance and fuel consumption, as well as causing high temperatures, which will result in damage to the catalytic converter and the vehicle.

NOTE: *While Land Rover North America Inc. maintains that an authorised Land Rover retailer is best equipped to carry out repairs and maintenance on the emission control system, such work may be carried out by any competent automotive repair shop or individual using certified parts.*

ROAD TESTING DYNAMOMETERS ('rolling roads')

Because your vehicle is equipped with anti-lock brakes and permanent four-wheel drive, it is essential that any dynamometer testing is carried out ONLY by a qualified person familiar with the testing and safety procedures on a four-wheel-drive dynamometer.

HOOD OPENING

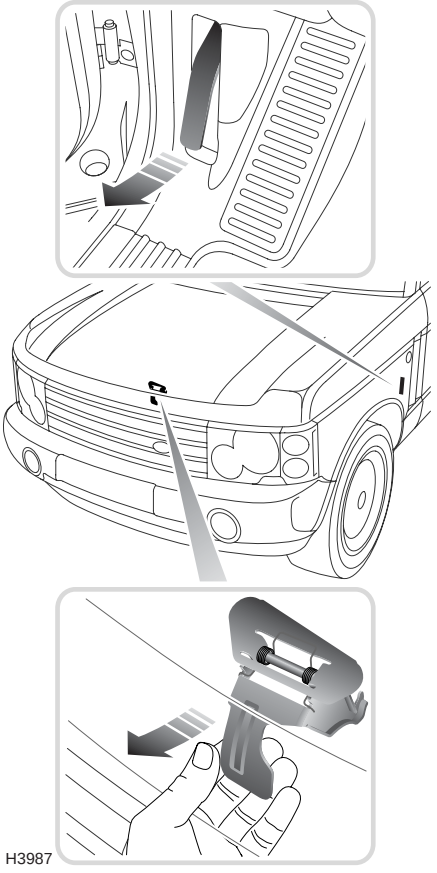

1. From inside the vehicle on the driver's side, pull the hood release handle (see upper inset).
2. Lift the hood safety catch lever (lower inset) and raise the hood.

Closing the hood

WARNING

DO NOT drive with the hood retained by the safety catch alone.

After closing the hood, check that the lock is fully engaged by attempting to lift the front edge of the hood. This should be free from all movement.

FLUID RESERVOIR LOCATIONS

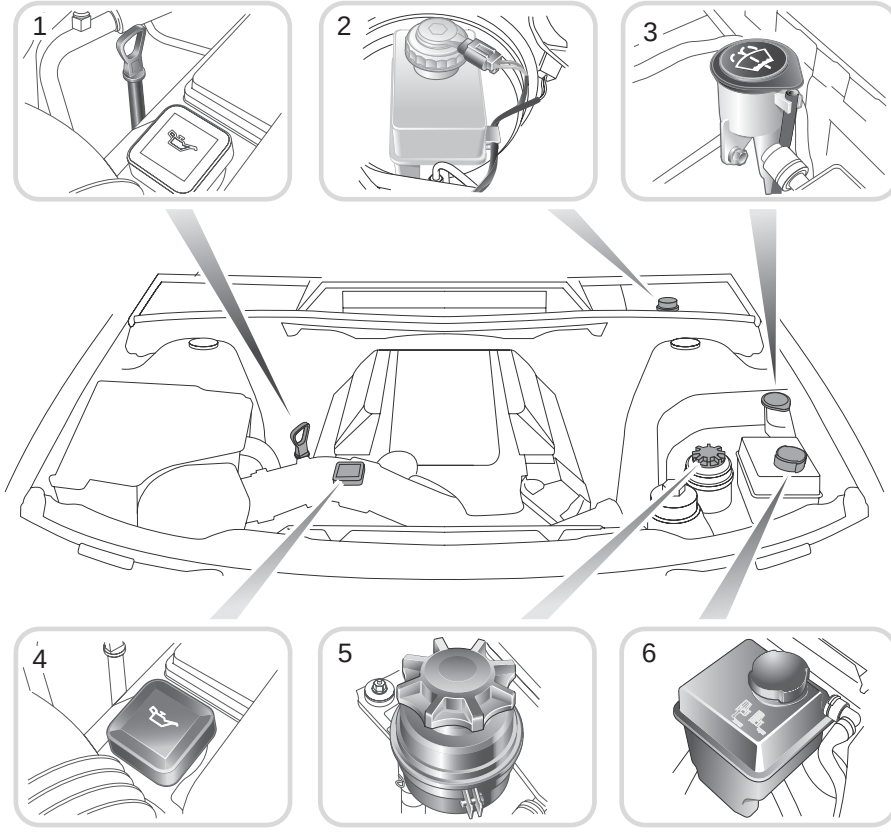

H3905

1. Engine oil dipstick.
2. Brake fluid reservoir.
3. Washer reservoir.
4. Engine oil filler cap.
5. Power steering reservoir.
6. Cooling system reservoir.

WARNING

To avoid serious injury or death, while working in the engine compartment, ALWAYS observe the safety precautions listed under 'SAFETY IN THE GARAGE', page 196

CHECK & TOP-UP

Check the oil level at least every 250 miles (400 km), when the engine is COLD and with the vehicle resting on level ground.

NOTE: *If it is necessary to check the oil level when the engine is hot, switch off the engine and let the vehicle stand for five minutes to allow the oil to drain back into the sump. DO NOT start the engine.*

As a general guide, if the level on the dipstick:

- is nearer to the upper mark than the lower, add no oil.
- is nearer to the lower mark than the upper, add half a quart of oil.
- is below the lower mark, add one quart of oil and re-check the level after a further five minutes.

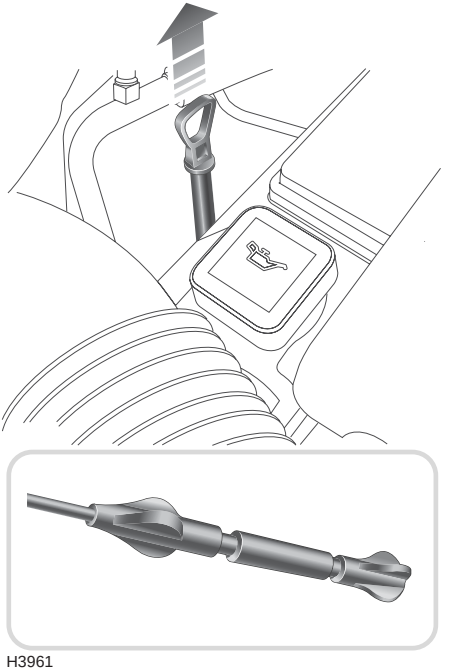

H3961

Oil specification

It is essential to use an oil suitable for the climatic conditions in which the vehicle is to be operated. Precise specifications are shown in *'LUBRICANTS AND FLUIDS', page 271*. If in doubt, contact your Land Rover retailer.

Topping-up

1. Withdraw the dipstick and wipe the blade clean.
2. Fully re-insert the dipstick and withdraw again to check the level, which should NEVER be allowed to fall below the lower mark on the dipstick.
3. To top-up, unscrew the oil filler cap and add oil to maintain the level between the UPPER and LOWER marks on the dipstick.

   DO NOT OVERFILL!

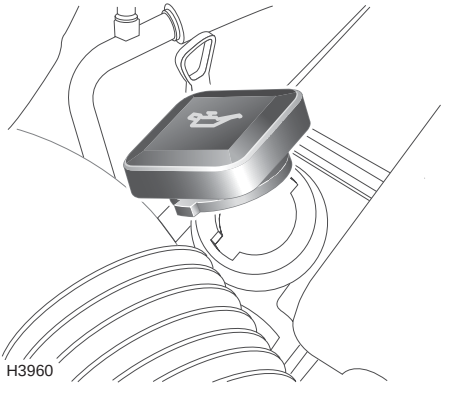

H3960

Oil levels above the MAX mark may cause engine damage. Some oil must be removed from the engine by a service technician.

DRAIN & REFILL

Ensure that the engine oil is changed at the recommended service intervals as specified in the Passport to Service book.

NOTE: *Under severe operating conditions (i.e. regular use in muddy terrain or dusty conditions), the engine oil must be changed more frequently, even to the extent of a daily change. Consult your Land Rover retailer for guidance.*

Used engine oil

WARNING

Prolonged contact with used engine oil can cause serious skin disorders, including dermatitis and cancer of the skin. Wear protective clothing if possible and ALWAYS wash thoroughly after contact.

It is illegal to pollute drains, water courses or soil with toxic chemicals such as used engine oil. Use authorised waste disposal sites to dispose of used oil and toxic chemicals.

It is assumed that the engine oil filter will be renewed at the same time as draining and refilling the engine oil.

Because any used engine oil remaining in the filter container will drain into the sump when the filter is changed, it is better to change the filter element (see *'Oil filter renewal', page 203*) before draining and refilling the engine oil.

Drain

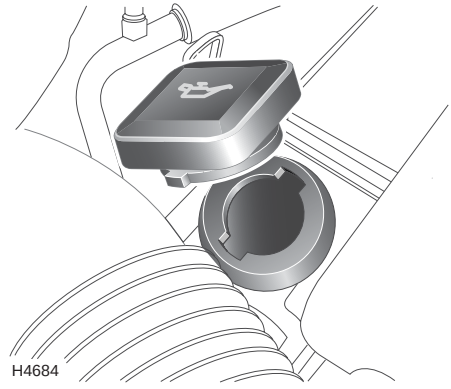

With the engine warm (to assist oil drainage) and the vehicle parked on firm, level ground, remove the filler cap and position a container of suitable size (at least 10 US quarts or 10 litres) under the drain plug, in the bottom of the sump.

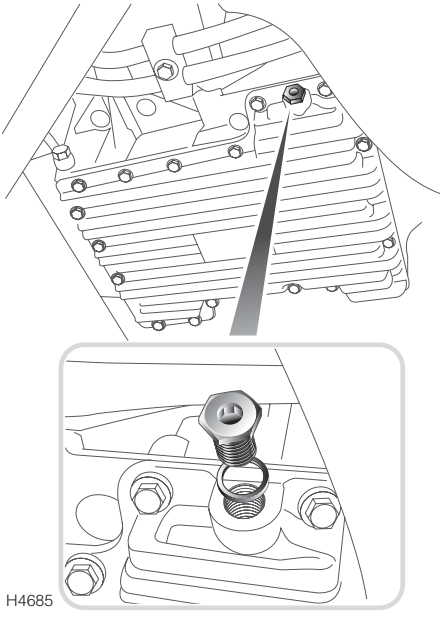

Remove the drain plug and copper washer and allow the engine oil to drain into the container.

WARNING

Oil from the engine can be very hot, to avoid harmful burns, take care when removing the drain plug.

Refill

Clean the oil drain plug and its mating surface on the engine sump. Fit the drain plug, complete with a new copper washer, and tighten to 13 lbf.ft (17 Nm).

Refill the engine with fresh oil, suitable for the climatic conditions in which the vehicle is to be operated (see *'LUBRICANTS AND FLUIDS', page 271*).

DO NOT overfill the engine! Remember that a little oil will always remain in the engine after draining and that, therefore, the quantity of oil required to refill the engine will be slightly less than the full capacity quoted in *'CAPACITIES', page 272*.

After filling, allow a few minutes to elapse before checking the level on the dipstick (this will allow all the oil to drain into the sump and enable a true reading to be obtained). Once the correct level of oil is shown on the dipstick, replace the filler cap.

Start and run the engine. Do not rev the engine until the oil pressure warning light extinguishes. Check for oil leaks around the drain plug.

Stop the engine, wait a few minutes, then check the oil level and top up if necessary.

Oil filter renewal

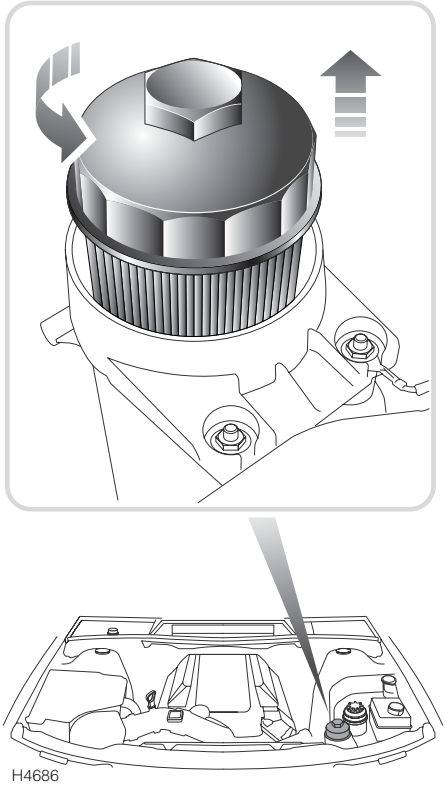

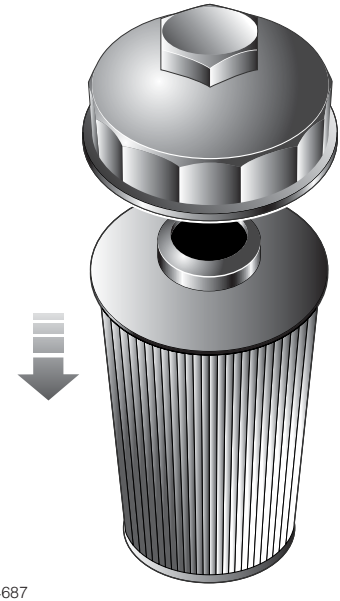

The engine oil filter is located at the front of the engine compartment.

1. Unscrew the filter cap anti-clockwise and raise it slightly. The filter element will be withdrawn by the cap.
2. Allow a few moments for the engine oil retained within the filter body to drain away.
3. With a suitable container handy, fully lift off the cap and element together and place them in the container.
4. Pull the cap from the element and clean it.
5. Clean the inside of the filter body.
6. Attach the cap to the new filter element by pushing it onto the end of the element.
7. Insert the element into the filter body and screw down the cap. Tighten to 18 lbf.ft (25 Nm)
8. Start and run the engine. Do not rev the engine until the oil pressure warning light extinguishes. Check for oil leaks around the filter body.
9. Stop the engine, wait a few minutes, then check the oil level and top up if necessary.

ELEMENT RENEWAL

Renewing the air cleaner element at the recommended service intervals (see your 'Passport to Service book') is extremely important. However, to maintain optimum engine performance under dusty operating conditions, more frequent renewal will be necessary. Consult your retailer for guidance.

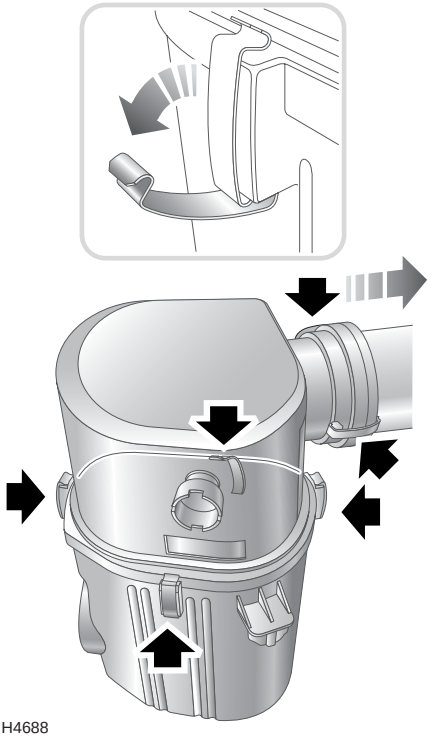

H4688

1. Release 2 catches securing the hose to the rear of the air cleaner; detach the hose.
2. Release 4 catches securing the cover to the air cleaner body and remove the cover to gain access to the element.

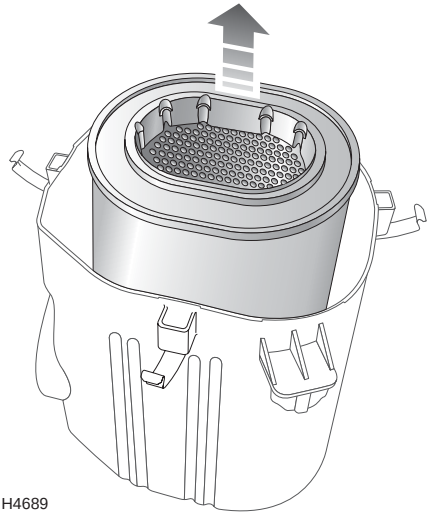

H4689

3. Remove and discard the air cleaner element, noting which way up the element fits. Before fitting a new element, clean the inside of the air cleaner body and cover.
4. Fit the new air cleaner element and cover and secure the catches.
5. Connect the hose to the rear of the air cleaner and secure the catches.

IMPORTANT INFORMATION
Always fit a NEW element; under no circumstances should a contaminated element be cleaned and used again.

SPARK PLUG REMOVE & REFIT

Spark plug removal

1. Disconnect the battery - ensuring that all text and cautions in the relevant section of the handbook (see *'BATTERY SAFETY', page 215*) are observed.

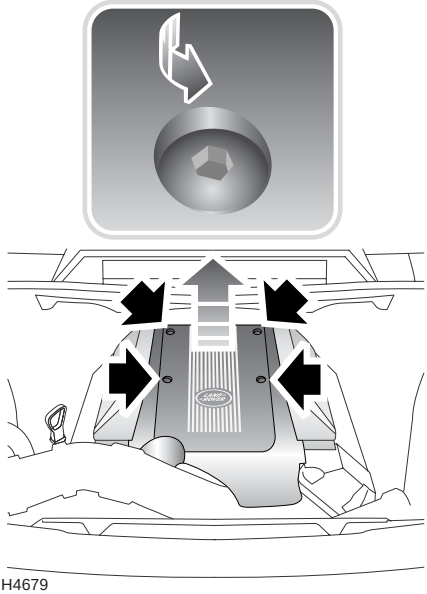

H4679

2. Release 4 Allen head turnbuckles and remove the acoustic cover, see above.

3. Working on one side of the engine, remove 2 bolt access covers from the ignition coil covers and remove the bolts beneath them.

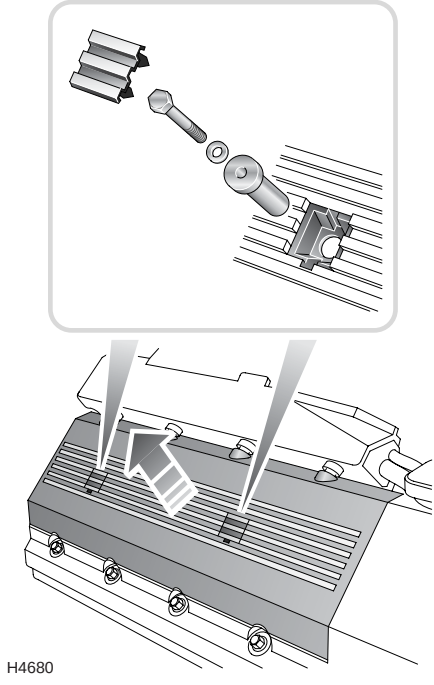

H4680

4. Remove the ignition coil cover.
5. Remove 2 bolt spacers from the ignition coil covers.
6. Repeat steps 3 to 5 for the other side of the engine.

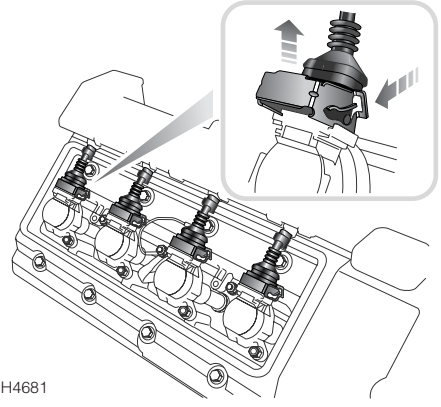
H4681

7. Remove 2 nuts and disconnect the wiring harness and camshaft cover earth leads.
8. Disconnect 8 multiplugs from their ignition coils by pulling up each metal locking clamp.
9. Discard both ignition coil cover gaskets.
10. Remove 14 nuts securing the ignition coils.

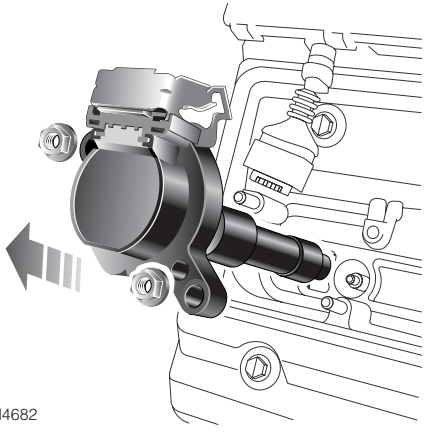
H4682

11. Pull out 8 ignition coil units.

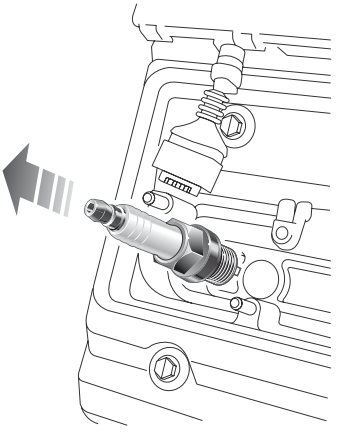
H4683

12. Clean the area around each spark plug and, using a suitable spark plug wrench, remove 8 spark plugs.

Fitting new spark plugs

When fitting new spark plugs, take care not to cross-thread a plug, otherwise costly damage to the cylinder head will result.

Only fit plugs of a type recommended by Land Rover (see *'V8 ENGINE', page 273*). Please note that fitting incorrect grades of plug may lead to engine failure and serious damage.

1. Fit 8 new spark plugs and tighten to a torque of 23 lbf.ft (31 Nm).
2. Fit an ignition coil to each plug.
3. Fit 14 nuts securing the ignition coils and tighten them to 3 lbf.ft (4 Nm).
4. Fit 2 new ignition coil cover gaskets
5. Connect each multiplug to its ignition coil and lock in position by pressing down each locking clamp.
6. Reposition the wiring harness and camshaft cover earth leads, fit the remaining 2 nuts and tighten to 3 lbf.ft (4 Nm).
7. Fit 2 bolt spacers to each ignition coil cover.
8. Fit both ignition coil covers, tighten the bolts and refit the 4 bolt access covers.
9. Refit the engine acoustic cover.
10. Reconnect the battery.

COOLANT CHECK AND TOP-UP

WARNING

NEVER remove the filler cap when the engine is hot -escaping steam or scalding water could cause serious personal injury.

Unscrew the filler cap slowly, allowing the pressure to escape before removing completely.

Avoid spilling anti-freeze onto a hot engine - a fire may result.

CAUTION: NEVER run the engine without coolant.

CAUTION: NEVER top-up with salt water. When travelling in territories where the water supply contains salt, always ensure that you carry a supply of fresh (rain or distilled) water.

NOTE: *Anti-freeze will damage painted surfaces: Soak up any spillage with an absorbent cloth immediately and wash the area with a mixture of car shampoo and water.*

The coolant level in the expansion tank should only be checked and topped-up if low level indication is given in the message centre. Always check the level WHEN THE SYSTEM IS COLD.

If it is necessary to remove the filler cap before the system has fully cooled, loosen the cap slowly, allowing the air pressure to escape gradually.

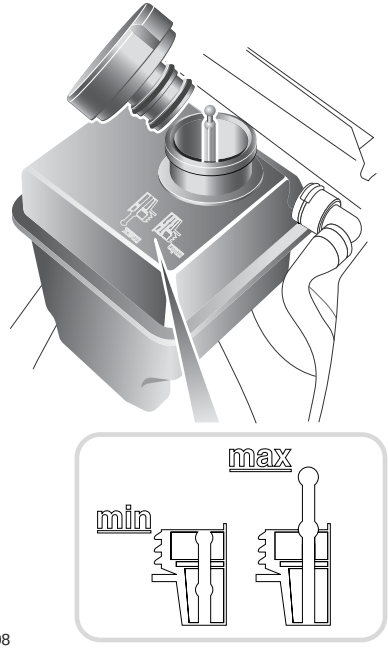

H3908

Top-up with a 50% mixture of anti-freeze and water so that the float protrudes slightly from the filler neck, in accordance with the illustration inset. **DO NOT OVERFILL!**

Ensure the cap is tightened fully after top-up is completed.

If the level has fallen appreciably, suspect leakage or overheating and arrange for your retailer to examine the vehicle.

CAUTION: An over-filled expansion tank may cause a build-up of pressure and excess fluid could be expelled through the filler cap.

ANTI-FREEZE

WARNING

Anti-freeze is poisonous and can be fatal if swallowed - keep containers sealed and out of the reach of children. If accidental consumption is suspected, seek medical attention immediately.

Prevent anti-freeze coming in contact with the skin or eyes. If this occurs, rinse immediately with plenty of water.

Anti-freeze contains important corrosion inhibitors. The anti-freeze content of the coolant must be maintained at 50% ± 5% all year round (not just in cold conditions). To ensure that the anti-corrosion properties of the coolant are retained, the anti-freeze content should be checked once a year and completely renewed every 4 years, regardless of distance travelled. Failure to do so may cause corrosion of the radiator and engine components.

The specific gravity of a 50% anti-freeze solution at 68ºF (20°C) is 1.075 and protects against frost down to -33ºF (-36°C).

Coolant specification

Use ONLY a 50% mix of water and Castrol Anti-freeze NF or approved alternative. See *'LUBRICANTS AND FLUIDS', page 271*.

In an emergency - and only if this type of anti-freeze is unavailable - top-up the cooling system with clean water, but be aware of the resultant reduction in frost protection. DO NOT top-up or refill with conventional anti-freeze formulations. If in doubt consult a Land Rover retailer.

NOTE: *When clean water is added in the event of an emergency, the low coolant light will illuminate if the water/anti-freeze mix ratio is over-diluted. This light will extinguish when the ratio of water/anti-freeze is returned to a 50% mix. This should be done at the earliest opportunity.*

BRAKE FLUID

WARNING

Brake fluid is highly toxic - keep containers sealed and out of the reach of children. If accidental consumption of fluid is suspected, seek medical attention immediately.

If brake fluid should come into contact with the skin or eyes, rinse immediately with plenty of water.

Take care not to spill fluid onto a hot engine - a fire may result.

CAUTION: DO NOT drive the vehicle with the fluid level below the 'MIN' mark.

NOTE: *Brake fluid will damage painted surfaces: Soak up any spillage with an absorbent cloth immediately and wash the area with a mixture of car shampoo and water.*

Check

The fluid level may fall slightly during normal use as a result of brake pad wear but should not be allowed to fall below the 'MIN' mark. Any substantial drop in fluid indicates a leak in the system, in which case the vehicle must NOT be driven and you should contact your retailer.

WARNING

Contact your retailer immediately if brake pedal travel is unusually long or if there is any appreciable drop in brake fluid level.

With the vehicle on level ground, check the fluid level at least every week (more frequently in high mileage or arduous operating conditions). Check the level visually through the side of the transparent reservoir without removing the filler cap.

Top-up

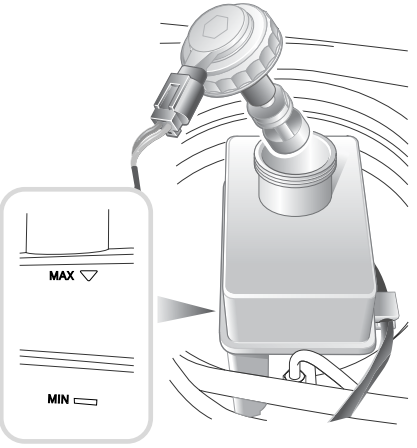

H4226

Wipe the filler cap clean before removing to prevent dirt from entering the reservoir. Unscrew the cap (1/8 turn) and top-up the reservoir to the 'MAX' mark using brake fluid conforming to DOT 4 specification.

Use only new fluid from an airtight container (old fluid from opened containers or fluid previously bled from the system will have absorbed moisture, which will adversely affect performance, and must NOT be used). **DO NOT OVERFILL!**

Brake fluid must be completely renewed every 3 years, regardless of distance travelled.

POWER STEERING FLUID

WARNING

Power steering fluid is highly toxic - keep containers sealed and out of reach of children. If accidental consumption of fluid is suspected, seek medical attention immediately.

If power steering fluid should come into contact with the skin or eyes, rinse immediately with plenty of water.

Do not spill power steering fluid onto a hot engine - a fire may result.

NOTE: *Power steering fluid will damage painted surfaces: Soak up any spillage with an absorbent cloth immediately and wash the area with a mixture of car shampoo and water.*

Emergency operation

Any large or sudden drop in the fluid level must be investigated by a qualified retailer.

If it can be established that fluid loss is slow, then the reservoir may be topped-up to the upper level mark to enable the vehicle to be driven to the nearest qualified retailer for examination.

If the fluid level has dropped below the lower level mark, top-up the reservoir before starting the engine, or damage to the steering pump could result.

CAUTION: The engine must NOT be started if the fluid level has dropped below the bottom of the dipstick - severe damage to the pump could result.

Check and Top-up

Check and top-up the fluid level ONLY with the engine switched off and the system cold, and ensure that the steering wheel is not turned after stopping the engine.

Wipe the filler cap clean to prevent dirt from entering the reservoir. Remove the filler cap and, using a lint-free cloth, wipe the dipstick clean. Refit the filler cap fully and remove it again to check the fluid level. Add fluid to the reservoir until the level is between the upper mark and the bottom of the dipstick. **DO NOT fill above the upper mark on the dipstick.**

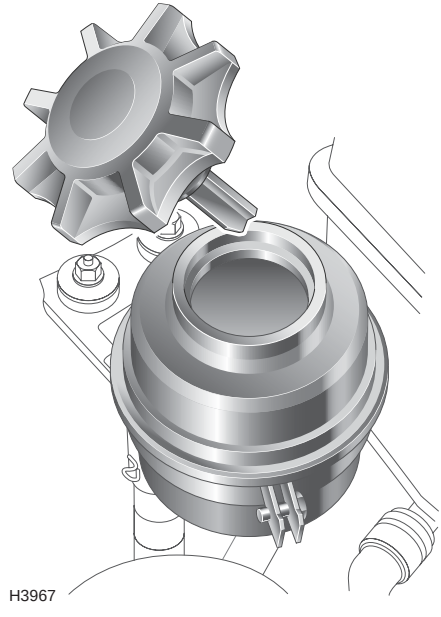

WINDSHIELD WASHERS

Fluid top-up

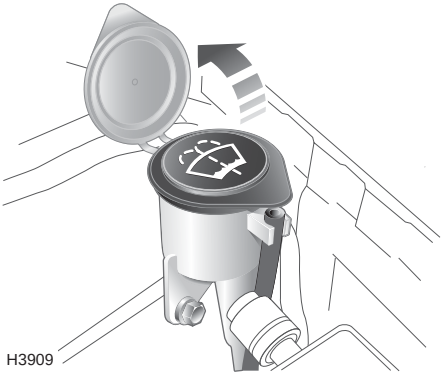

The windshield washer reservoir supplies both windshield and rear window washer jets.

Check the reservoir level at least every week and to prevent freezing in cold weather, top-up with a mixture of water and a recommended screenwash.

Preferably mix the recommended quantities of water and screenwash in a separate container before topping-up the system, and always follow the instructions on the screenwash container.

CAUTION: State or local regulations on volatile organic compounds may restrict the use of methanol, a common windshield washer anti-freeze additive. Washer fluids containing non-methanol anti-freeze agents should be used only if they provide cold weather protection without damaging the vehicle's paint finish, wiper blades or washer system.

WARNING

If you operate your vehicle in temperatures below 40 degrees F, use washer fluid with anti-freeze protection. In cold weather, failure to use washer fluid with anti-freeze protection could result in impaired windshield vision and increase the risk of a vehicle crash.

CAUTION: DO NOT use an anti-freeze or vinegar/water solution in the washer reservoir - anti-freeze will damage painted surfaces, while vinegar can damage the windshield washer pump.

Screenwash

Use Land Rover Parts STC8249 screenwash, or any good quality proprietary screenwash.

WARNING

Some screenwash products are inflammable, particularly if high or undiluted concentrations are exposed to sparking. Do not allow screenwash to come into contact with naked flames or sources of ignition.

NOTE: *Body panels may suffer discoloration as a result of screenwash spillage.Take care to avoid spillage, particularly if an undiluted or high concentration of screenwash is being used. If spillage occurs, wash the affected area immediately with water.*

WARNING

Do not put engine coolant in the windscreen washer fluid reservoir. If engine coolant is sprayed onto the windscreen, it could make it difficult to see through the windscreen.

Washer jets
Operate the washer switches periodically to check that the nozzles are clear and properly directed.

The windshield washer jets are set during manufacture and should not need adjusting. However, if adjustment is ever necessary, insert a needle into the jet orifice and lever gently to position each jet so that the spray is directed towards the center of the windshield.

Should a windshield washer jet become obstructed, insert a needle or thin strand of wire into the orifice to clear the blockage.

NOTE: *The rear screen washer jet is integral with the wiper arm and requires no adjustment.*

HEADLIGHT WASHERS*
The spray jets are set during manufacture and should not need to be adjusted.

WIPER BLADE REPLACEMENT

Front wiper blades

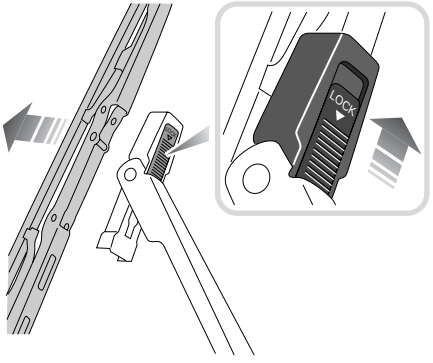

H3912

Lift the wiper arm away from the windshield. Disconnect the blade by pushing the locking tab (see inset in illustration) to the unlock position.

Fitting a replacement blade is a reversal of this process. Check that the blade is securely locked before returning the wiper assembly to the windshield.

Only fit replacement wiper blades that are identical to the original specification.

Grease, silicone and petroleum-based products impair the blade's wiping capability. Wash the wiper blades in warm soapy water and periodically check their condition.

If signs of hardness or cracking in the rubber are found, or if the wipers leave streaks or unwiped areas on the windshield during use, then the wiper blades should be replaced.

Clean the windshield regularly with an approved glass cleaner and ensure the windshield is thoroughly cleaned before fitting replacement wiper blades.

Rear wiper blade

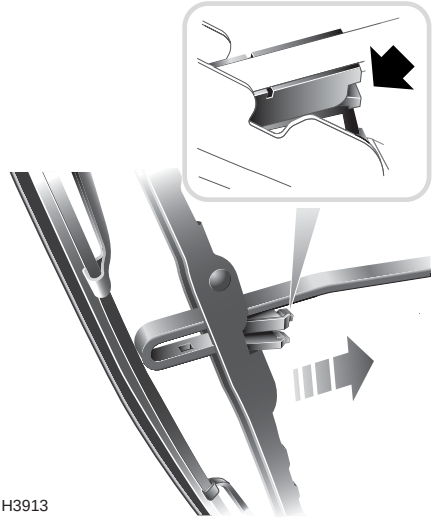

H3913

Lift the wiper arm away from the rear window and pivot the blade assembly away from the arm. Press the tab (arrowed in inset), to release the blade assembly and slide the assembly off the end of the wiper arm. Carefully replace the arm to its stowed position.

To replace, position the wiper arm into the aperture in the middle of the blade assembly and push firmly into position until the blade clips into place.

Headlight wiper blade

The headlight wiper blade and wiper arm are an integral unit and should only be replaced by qualified personnel.

BATTERY SAFETY

WARNING

ALWAYS wear appropriate eye protection when working around batteries.

Batteries contain acid, which is both corrosive and poisonous. If spillage occurs:

- ***On clothing or the skin - remove any contaminated clothing immediately, flush the skin with large amounts of water, and seek medical attention urgently.***
- ***In the eyes - flush with clean water immediately for at least 15 minutes. Seek medical attention urgently.***
- ***Swallowing battery acid can be fatal unless IMMEDIATE action is taken - seek medical attention urgently.***

During normal operation batteries emit explosive hydrogen gas - to avoid fire, ensure sparks and naked lights are kept away from the engine compartment.

For your safety, remove all metal wrist bands and jewellery before working in the engine compartment and NEVER allow the battery terminals or vehicle leads to make contact with tools or metal parts of the vehicle.

WARNING

Battery posts, terminals and related accessories contain lead and lead compounds. Wash hands after handling.

BATTERY MAINTENANCE

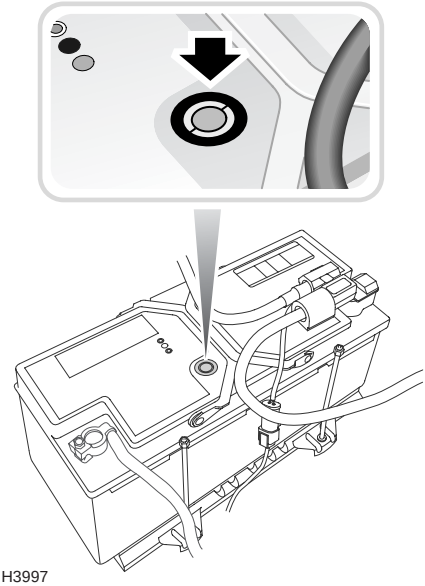

H3997

The battery is designed to be maintenance free, so topping-up is unnecessary. On the top of the battery there is a battery condition indicator (arrowed in inset). Examine the indicator periodically to check the battery's condition. When the indicator shows:

- GREEN - the battery is in a good state of charge.
- DARK (turning to black) - the battery needs charging.
- CLEAR (or light yellow) - the battery must be replaced. Do not charge the battery or jump start the vehicle in this condition.

NOTE: *When checking the battery condition indicator, if necessary, clean the battery top to ensure a clear view.*

If the indicator shows clear or yellow, tap the indicator with the handle of a screwdriver to disperse any air bubbles. If the color is unchanged, the battery must be replaced.

Battery disconnection, charging, removal and replacement

There may at times be a requirement to disconnect the battery, eg, to necessitate Interlock Code emergency deactivation - *see your Audio & Navigation handbook.*

- Turn the starter switch off and remove the starter key.
- Wait for at least two minutes before starting the disconnection procedure. Ensure you have your remote handset available as you may have to turn off the alarm sounder.
- Disconnect ONLY the negative ('-') terminal.
- Wait for two minutes before reconnecting the battery.

If the alarm sounds when the battery is reconnected, use the key fob to turn it off.

WARNING

The battery positive ('+') terminal is fitted with a pyrotechnic charge, designed to disconnect the battery as a safety precaution in the event of a severe collision. For this reason, the battery charging, disconnection and removal should only be attempted by qualified personnel.

WARNING

Battery posts, terminals and related accessories contain lead and lead compounds. Wash hands after handling.

Effects of battery disconnection

Following disconnection and subsequent reconnection of the vehicle battery, a number of the vehicle systems will be reset automatically. This may take a few minutes and with some systems, sensors have to detect certain actions whilst driving before full operability returns. This in no way affects the safe operation of the vehicle.

Replacement batteries

WARNING

Only fit a replacement battery of the same type and specification as the original - other batteries may vary in size or have different terminal positions which could cause a fire hazard when connected to the vehicle's electrical system.

Battery disposal

Used batteries should be recycled. However, batteries are hazardous - you should seek advice about disposal from a Land Rover retailer or your local authority.

CARING FOR YOUR TIRES

WARNING

DEFECTIVE TIRES ARE DANGEROUS! Do not drive if any tire is damaged, is excessively worn, or is inflated to an incorrect pressure.

ALWAYS replace worn or defective tires with the factory recommended specification (see 'WHEELS & TIRES', page 276). Failure to do so may affect the safe handling of the vehicle.

Always drive with consideration for the condition of the tires, and regularly inspect the tread and side walls for any sign of distortion (bulges), cuts or wear.

The most common causes of tire failure are:

- Bumping against curbs
- Driving over deep potholes in the road.
- Driving with under- or over-inflated tires

NOTE: *If possible, protect tires from contamination by oil, grease, fuel and other automotive fluids.*

Safety practices

The way you drive has a great deal to do with your tire mileage and safety. Cultivate good driving habits for your own benefit.

- Observe posted speed limits
- Avoid fast starts, stops and turns
- Avoid potholes and objects on the road
- Do not run over curbs or hit the tire against the curb when parking
- Avoid wheel spin

WARNING

Avoid tire spinning. The forces created by rapidly spinning a tire can cause failure of, or damage to, the tire structure.

If a tire does spin, never exceed the 35 mph point indicated on the speedometer.

Do not allow anyone to stand near, or directly in line with, a tire that may spin.

Tire pressures

Correctly inflated tires will ensure that you enjoy the best combination of tire life, ride comfort, fuel economy and road handling.

Under-inflated tires wear more rapidly, can seriously affect the vehicle's road handling characteristics and fuel consumption, as well as increase the risk of tire failure. Over-inflated tires give a harsher ride, wear unevenly and are more prone to damage.

Tire pressures should be checked at least once a week with normal road use, but should be checked DAILY if the vehicle is used off-road.

Check the pressures (including the spare wheel) when the tires are cold - be aware that it only takes 3 miles (5 km) of driving to warm the tires sufficiently to affect the tire pressures.

NOTE: *Air pressure naturally increases in warm tires. If it is necessary to check the tires when they are warm (after the vehicle has been driven for a while), the pressure may have increased by up to 6 lbf/in^2 (41 kPa). In this circumstance, NEVER let air out of the tire in order to match the recommended pressures.*

WARNING

If the vehicle has been parked in strong sunlight or used in high ambient temperatures, DO NOT reduce tire pressures; instead, move the vehicle into the shade and allow the tires to cool before checking.

The recommended pressures for cold tires are shown in *'WHEELS & TIRES', page 276*.

Use a tire gauge to check the tire inflation pressures, including the spare, at least weekly and before long journeys. Land Rover strongly recommends using a reliable tire pressure gauge, as automatic service station gauges may be inaccurate.

Checking tire inflation pressures

Check the tire inflation pressure when the tires are cold, i.e. before driving.

1. Remove the cap from the valve on one tire.
2. Firmly press a tire gauge onto the valve.
3. Add air to achieve the recommended tire pressure.
4. If you overfill the tire, release air by pushing on the metal stem in the center of the valve. Then recheck the pressure with your tire gauge.

NOTE: *Tire pressure increases in warm weather and decreases in cold weather.*

5. Replace the valve cap.
6. Repeat with each tire.

NOTE: *The pressure for your spare tire should be set to the highest value given for your wheel/tire size combination, and adjusted after fitment.*

7. Visually inspect the tires to make sure that there are no nails or other objects embedded in them.
8. Check the sidewalls to make sure that there are no gouges, cuts, bulges or other irregularities.

Tire wear

H4942

Tires fitted as original equipment have wear indicators moulded into the tread pattern. When the tread has worn down to 1/16 inch (1.6 mm) the indicators start appearing at the surface of the tread pattern, producing the effect of a continuous band of rubber across the width of the tire.

A tire MUST be replaced as soon as an indicator band becomes visible or the tread depth reaches the minimum permitted by legislation in the market you are driving in.

Tread depth must be checked regularly (at every maintenance service, or more frequently). Always replace a tire before the tread reaches a remaining depth of 1/16 inch (1.6 mm). DO NOT drive with tires worn to this limit, the safety of the vehicle and occupants will be adversely affected.

NOTE: *After off-road use, check to make sure there are no lumps, cuts or bulges in the tires or exposure of the ply or cord structure.*

Valves

Keep the valve caps screwed down firmly - they prevent dirt from entering the valve. Check the valve for leaks (listen for a tell-tale hissing) when you check the tire pressure.

Punctured tires

Your vehicle is fitted with tubeless tires, which may not leak immediately if penetrated by a sharp object, provided the object remains in the tire.

A puncture of this kind will eventually cause the tire to lose pressure, which is why regular (and frequent) checking of tire pressures is important. Punctured or damaged tires must be permanently repaired, where possible within industry legislation by a qualified technician, or replaced as soon as possible.

If you sustain a puncture, reduce driving speed immediately in a straight line where possible, whilst avoiding heavy braking or sharp steering inputs. Pull over at the first safe place possible to change your tire.

Highway hazards

No matter how carefully you drive, there is always the possibility of a puncture on the highway. In this event, drive slowly to the closest safe area out of traffic. This may further damage the flat tire, but your safety is more important.

If you feel a sudden vibration or ride disturbance while driving, or you suspect that your tire or vehicle has been damaged, immediately reduce your speed. Drive with caution and safely pull off the road at the earliest opportunity. Stop and inspect the tire for damage. If the tire is under-inflated or damaged, remove the tire and wheel and replace it with your spare. If you cannot detect a cause, have the vehicle towed to the nearest vehicle or tire retailer to have the vehicle inspected.

Replacement tires

WARNING

Wheels and tires are matched to suit the handling characteristics of the vehicle. For safety, ALWAYS check that replacement tires comply with the original specification (see 'WHEELS & TIRES', page 276) and that the load and speed ratings shown on the side wall are the same as that of the original equipment. Contact your Land Rover retailer for further information or assistance.

UNIFORM TIRE QUALITY GRADING

Quality Grades can be found where applicable on the tire sidewall between tread shoulder and maximum section width. For example:

Treadwear 200	*Traction AA*	*Temperature A*

Tires that are deep tread, winter-type snow tires are exempt from the marking requirements as described above. Consequently, the tires fitted to your vehicle may not carry these markings.

All passenger car tires must conform to Federal Safety Requirements in addition to these grades.

Treadwear

The treadwear grade is a comparative rating based on the wear rate of the tire when tested under controlled conditions on a specified government test course. For example; a tire graded 150 would wear one and one-half (1½) times as well on the government course as a tire graded 100. The relative performance of tires depends upon the actual conditions of their use however, and may depart significantly from the norm due to variations in driving habits, service practices and differences in road characteristics and climate.

Traction

The traction grades, from highest to lowest, are AA, A, B and C. The grades represent a tire's ability to stop on wet pavement as measured under controlled conditions on specified government test surfaces of asphalt and concrete. A tire marked 'C' may have poor traction performance.

WARNING

The traction grade assigned to this tire is based on straight-ahead braking traction tests, and does not include acceleration, cornering, hydroplaning, or peak traction characteristics.

Temperature

The temperature grades A (the highest), B, and C, represent a tire's resistance to the generation of heat and its ability to dissipate heat when tested under controlled conditions on a specified indoor laboratory test wheel. Sustained high temperatures can cause the material of a tire to degenerate and reduce tire life, and excessive temperature can lead to sudden tire failure.

The grade 'C' corresponds to a level of performance which all passenger car tires must meet under the Federal Motor Safety Standard No 109.

Grades 'B' and 'A' represent higher levels of performance on the laboratory test wheel than the minimum required by law.

WARNING

The temperature grade for this tire is established for a tire that is properly inflated and not overloaded. Excessive speed, under inflation, or excessive loading, either separately or in combination can cause heat buildup and possible tire failure.

Directional Tires*

Directional tires give greater benefit when they rotate in a forward direction, i.e., when the vehicle is moving forwards. They give enhanced levels of deep-water grip while still maintaining low tyre noise generation.

Should a tyre be fitted to a vehicle in the wrong directional sense, these benefits will only be maintained if the tyre is remounted to the rim so that it rotates in the direction indicated on the sidewall.

There are two types of directional tyre and the direction indicators are shown in the illustration below.

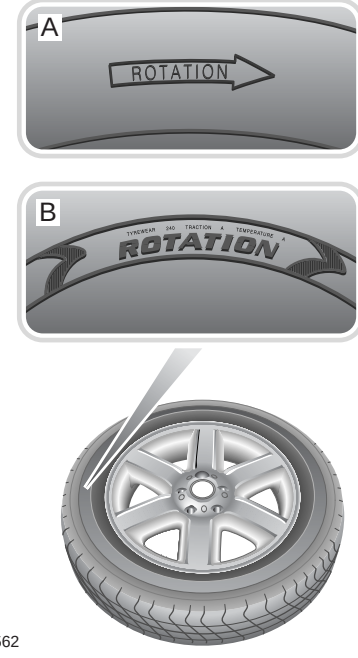

H4562

SNOW CHAINS

Snow chains are designed for use on hard surface roads in extreme conditions only, and are not recommended for off-road use. If it is necessary to fit snow chains to your Land Rover, ALWAYS observe the following:

- ***Front wheels:*** Snow chains must not be fitted to the front wheels unless the vehicle is equipped with appropriate accessory tires, see *'WHEELS & TIRES', page 276*.
- ***Rear wheels:*** Snow chains can be fitted to the rear wheels of any vehicle, provided the wheels and tires conform to one of the original equipment or applicable accessory fit specifications listed later in the handbook, see *'WHEELS & TIRES', page 276*.
- If snow chains are to be fitted (in accordance with the table in *'WHEELS & TIRES', page 276*), then ONLY Land Rover approved chains must be used - these are designed for your vehicle and, when correctly fitted, will eliminate any risk of damage to other components.
- Always adhere to the snow chain fitting and re-tensioning instructions and the speed limitations recommended for varying road conditions. NEVER exceed 30 mph (50 km/h).
- ONLY fit snow chains in pairs.
- Avoid tire damage by removing the chains as soon as the road is free from snow.

WARNING

DO NOT fit unapproved snow chains to the wheels of your Land Rover - there is a risk that they could damage brake and fuel system components.

WASHING YOUR VEHICLE

H3854

CAUTION: Read individual product warnings before using any car cleaning or washing products..

CAUTION: Some high pressure cleaning systems are sufficiently powerful to penetrate door and window seals and damage rubbing strips and locking mechanisms. Never aim the water jet directly at heater air intakes, body and sunroof seals, or at any components that might easily be damaged.

Wash your vehicle frequently using a sponge and generous quantities of cold or slightly warm water containing a car shampoo. Rinse and dry off with a chamois leather.

- Do not use hot water!
- Do not use detergent soap products or washing-up liquid!
- In hot weather, do not wash the vehicle in direct sunlight.

Underbody maintenance

Corrosive materials used for snow and ice removal and dust control can collect on underbody parts. If these materials are not removed, accelerated rusting can occur. Use a hose to regularly flush the underbody with plain water, taking particular care to thoroughly clean those areas where mud and other debris can easily collect.

Similarly, after off-road driving or wading in muddy or salt water conditions, use a hose to wash underbody components and other exposed parts of the vehicle.

When using a hose, do not direct the jet into the heater air intake ducts, or through the wheel trim apertures onto the brake components, or at the door, window or sunroof seals, where water pressure could penetrate the seals.

If damage or corrosion to the underbody area is detected, please have the vehicle checked by a retailer at the earliest opportunity.

Steam cleaning

Before steam cleaning the engine compartment, cover the power steering and brake fluid reservoirs to prevent contamination of fluid. After steam cleaning carefully re-wax the metallic components, especially the steering column, engine coolant pipes, hose clips and the ignition coil clamp, to prevent corrosion - if necessary contact your Land Rover retailer for advice.

Removing tar spots

Use mineral spirits to remove tar spots and stubborn grease stains from paintwork. Then wash immediately with soapy water to remove all traces of spirit.

Body protection
After washing, inspect the paintwork for damage. Any stone chips, fractures or deep scratches in the bodywork should be repaired promptly. Bare metal will corrode quickly and can develop into major repair expense. Some exterior panels of your vehicle are made of aluminium which will not corrode in the same manner as steel. However, any damage should still receive prompt attention. Minor chips and scratches can be repaired with touch-up materials available from your retailer. Larger areas of damage need to be corrected to professional standards immediately.

Cast alloy road wheels
The cast alloy road wheels are covered with a protective coating. To prevent corrosion it is essential that this coating is not damaged. To clean the wheels use a warm soapy liquid, stubborn stains can be removed using a soft brush.

Polishing
Occasionally treat the paint surface with an approved polish containing the following properties:

- Very mild abrasives to remove surface contamination without removing or damaging the paint.
- Filling compounds that will fill scratches and reduce their visibility.
- Wax to provide a protective coating between the paint and the elements.

NOTE: *DO NOT apply car polish to the unpainted areas of the bumper mouldings - polish will become ingrained in the textured finished.*

Sunroof
It is essential that the sunroof aperture surround, channels, drain tubes and slides (accessible with the panel fully open), are kept clear, clean and lubricated for efficient operation. This requirement is particularly important in dusty environments.

If necessary contact your Land Rover retailer for advice.

Glass and mirrors
Clean the rear window with a soft cloth to avoid damaging the heating elements. DO NOT scrape the glass or use an abrasive cleaning fluid.

Mirror glass is particularly susceptible to damage. Wash with soapy water. DO NOT use abrasive cleaning compounds or metal scrapers to remove ice.

CLEANING THE INTERIOR

CAUTION: Read individual product warnings before using any car cleaning or washing products.

Plastic materials

Clean plastic-faced or cloth covered surfaces with warm water and a non-detergent soap and wipe with a clean cloth.

NOTE: *DO NOT polish facia components - for safety, these should remain non-reflective.*

Leather

Leather faced features should be cleaned with a damp cloth moistened with undiluted leather cleaner. Dry and polish the leather with a dry, lint-free cloth.

Land Rover recommends that leather is cleaned and protected at least every six months, but maybe as often as every 1-2 months for high mileage cars or cars kept in a hostile environment.

Leather cleaning kit BAC500490 is recommended and endorsed by Land Rover for this purpose. use in accordance with the instructions printed on the label.

NOTE: *Some materials/fabrics are prone to 'dye-transfer', which can cause unsightly discolouration of lighter colour leathers. Affected areas should be cleaned and re-protected as soon as possible.*

DO NOT use chemical or abrasive materials to clean leather. Gasoline, white spirit, alcohol, detergents, washing-up liquid, household cleaners, furniture polishes/creams or solvents should never be used on leather. Whilst these products may give initially impressive results, their use will lead to rapid deterioration of the leather and will invalidate the warranty.

Carpet and fabrics

Clean with diluted nylon upholstery cleaner - test on a concealed area first.

Instrument pack, clock and radio

Clean with a dry cloth only! DO NOT use cleaning fluids or sprays.

Seat belts

Extend the belts, then use warm water and a non-detergent soap to clean. Allow the belts to dry naturally, and do not retract them or use the vehicle until they are completely dry.

Airbag module covers

WARNING

To prevent airbag SRS damage, the steering wheel center pad, the area of the facia panel containing the passenger airbag, the roof headlining and the front door trim panels should ONLY be cleaned sparingly with a damp cloth, warm water and a non-detergent soap.

DO NOT allow these areas to be flooded with liquid, and DO NOT use gasoline, detergent, furniture cream or polishes.

Heated rear window

The following precautions must be taken, to avoid irreparable damage being caused to the printed circuit which is ‘baked’ onto the interior of the window.

- Do not remove labels or stickers from the window with the aid of sharp instruments or similar equipment, likely to scratch the glass.
- Care should be taken to avoid inadvertently scratching the glass with a ringed finger etc, when cleaning or wiping the window.
- Do not clean the window with harsh abrasives.

VEHICLE IDENTIFICATION NUMBER (VIN)

If you need to communicate with a Land Rover retailer, you may be asked to quote the Vehicle Identification Number (VIN).

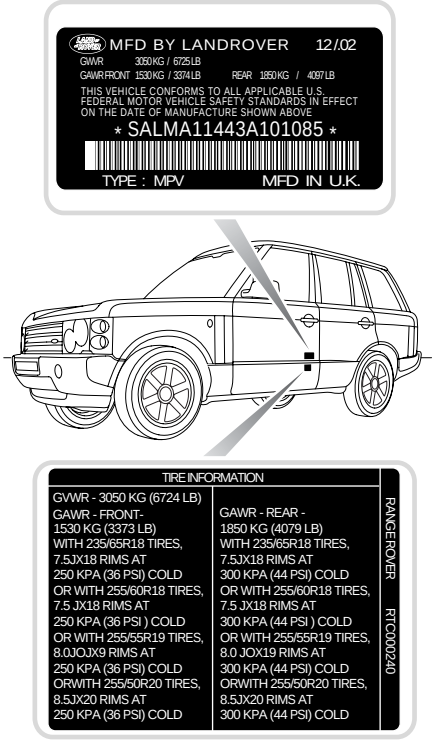

H4315

Example of a VIN plate and certification label

The VIN and other information concerning the vehicle can be found on the certification label affixed to the lock face of the front left-hand door.

WARNING

DO NOT exceed the gross weight or axle loads stated on the certification label attached to the vehicle. Exceeding allowable vehicle and axle loads will increase the risk of tire or suspension failure, increase vehicle brake stopping distance, and adversely affect vehicle handling and stability which may result in a crash or rollover.

Federal VIN plate

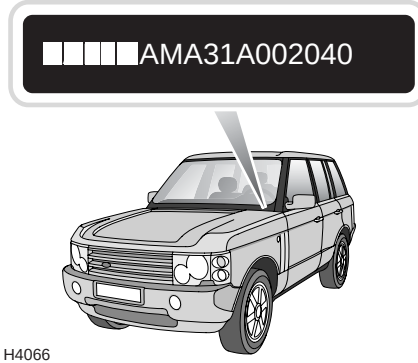

H4066

In addition, the Federal VIN plate is mounted to the vehicle body so that it is visible through the lowest part of the left side of the windshield.

PARTS AND ACCESSORIES

Your vehicle has been designed, built and tested to cope with a variety of off-road driving conditions, some of which can place the severest possible demands on control systems and components. As such, fitting replacement parts and accessories that have been developed and tested to the same stringent standards as the original components will safeguard the continued reliability, safety and performance of your vehicle.

To augment the vehicle's already impressive performance, a comprehensive range of Land Rover-approved replacement parts and accessories is available, enabling the vehicle to fulfil a wide variety of roles, and enhancing and protecting the vehicle in the many tasks to which it can be applied.

Land Rover parts are the only parts built to original equipment specifications AND approved by Land Rover designers; this means that every single part and accessory has been rigorously tested by the same engineering team that designed and built the vehicle and, with the exception of maintenance items that are designed to be replaced sooner, is warranted as provided in the Passport to Service.

A full list and description of all accessories is available from your Land Rover retailer.

WARNING

DO NOT fit unapproved accessories or conversions, as they could affect the safety of the vehicle.

Land Rover will not accept any liability for death, personal injury or damage to property which may occur as a direct result of fitment of non-approved accessories or the carrying out of non-approved conversions to Land Rover vehicles.

Land Rover North America Inc. strongly advises against making any modifications to the suspension or steering system. This could seriously affect the handling and stability of the vehicle leading to loss of control or rollover.

Electrical equipment

WARNING

It is extremely hazardous to fit or replace parts or accessories whose installation requires the dismantling of or addition to either the electrical, fuel or SRS airbag systems, as damage to the proper operation of these systems could result.

ALWAYS consult a Land Rover retailer before fitting any electrical accessory.

Fitting inferior quality parts or accessories, may be dangerous and could invalidate the vehicle warranty.

It is recommended that you always consult a Land Rover retailer for advice regarding the approval, suitability, installation and use of any parts or accessories before fitting.

Travelling abroad

In certain countries, it is illegal to fit parts which have not been made to the vehicle manufacturers' specification.

Owners should ensure that any parts or accessories fitted to the vehicle while travelling abroad will also conform to the legal requirements of their own country when they return home.

SRS/airbag

WARNING

The components that make up the SRS/airbag are sensitive to electrical or physical interference, either of which could easily damage the system and cause inadvertent operation or malfunction of the airbag modules.

To prevent any SRS/airbag malfunction, ALWAYS consult a Land Rover retailer before fitting any of the following:

- ***Electronic equipment such as a mobile phone, two-way radio or in-car entertainment system.***
- ***Accessories attached to the front or side of the vehicle.***
- ***Any modification to the front or side of the vehicle.***
- ***Any modification involving the removal or repair of any wiring or any component in the vicinity of the SRS components, including: the steering wheel, steering column, instrument and facia panels, front door trim and roof headlining.***
- ***Any modification to the facia panels, steering wheel, front door trim or roof headlining.***

Emergency Information

Tailgate Emergency Release

EMERGENCY MANUAL OPERATION 233

Wheel Changing

TOOL KIT 234
WHEEL CHANGING 235
REMOVING THE SPARE WHEEL 236
CHANGING A WHEEL. 238

Emergency Starting

STARTING AN ENGINE WITH A DISCHARGED BATTERY 241
USING BOOSTER CABLES 241
CONNECTING THE BOOSTER CABLES. 242
RECEIVING A BOOSTER START. 243
GIVING A BOOSTER START. 244

Towing the Vehicle

TOWING EYES 246
TOWING FOR RECOVERY 246
TOWING THE VEHICLE ON FOUR WHEELS 246
RECREATIONAL/MOTORHOME TOWING. 247
TRANSPORTER OR TRAILER LASHING. 248

Fuses

FUSES 249
PASSENGER COMPARTMENT FUSE BOX 250
REAR LOADSPACE FUSE BOX. 254

Bulb Replacement

REPLACING BULBS 255
HEADLIGHT HIGH BEAM (HALOGEN) 256
FRONT DIRECTION INDICATOR, SIDELIGHT AND FRONT SIDE MARKER LIGHT 258
REAR LIGHT CLUSTER (Tail, indicator & fog lights) 259
REAR SIDE MARKER LIGHTS 260
REVERSE LIGHTS 261
NUMBER PLATE LIGHTS 262
SIDE REPEATER LIGHT 262
FRONT FOG LIGHTS 263
DOOR/PUDDLE/LOWER FOOTWELL LIGHTS . . 264
GLOVEBOX LIGHT 264
UPPER FOOTWELL LIGHTS. 265
LUGGAGE LIGHTS 265

TAILGATE LIGHT 266
MAP LIGHT. 266
VANITY MIRROR LIGHT 267

EMERGENCY MANUAL OPERATION

Upper tailgate:

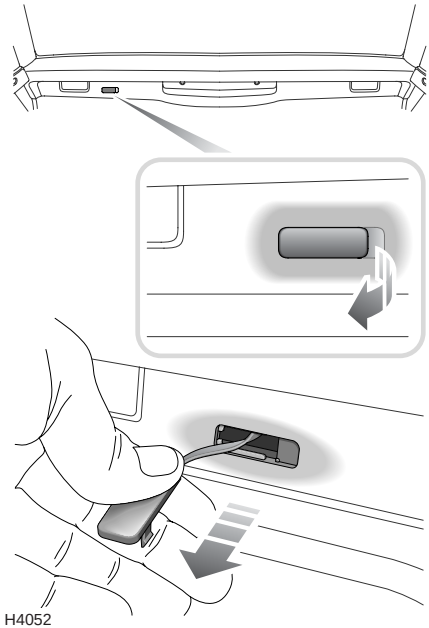

If the battery has been disconnected or has discharged, the tailgate can be opened manually as follows:

- Fold the rear loadspace cover (see *'Folding the loadspace cover from inside the vehicle', page 124*, for instructions).
- From the rear loadspace, lever out the plastic tab (see inset).
- Pull the tab to release the upper tailgate.
- Raise the upper tailgate.

Lower tailgate:

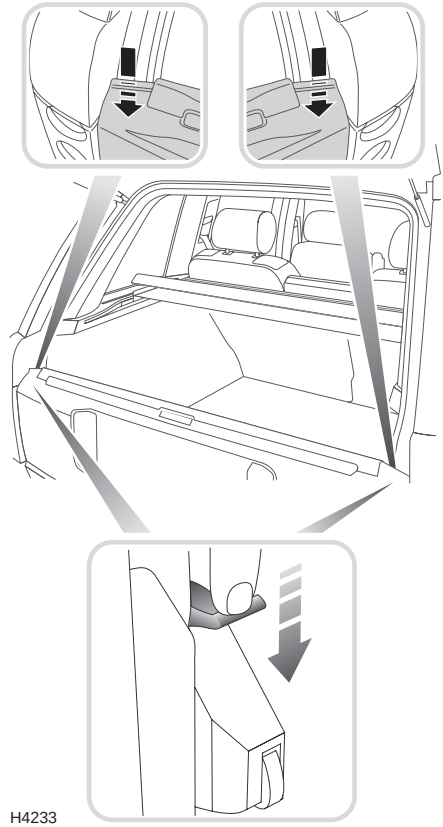

With the upper tailgate open, push down on the two hidden catches (see upper insets), either side of the tailgate. The catches can be operated either one at a time, or simultaneously.

TOOL KIT

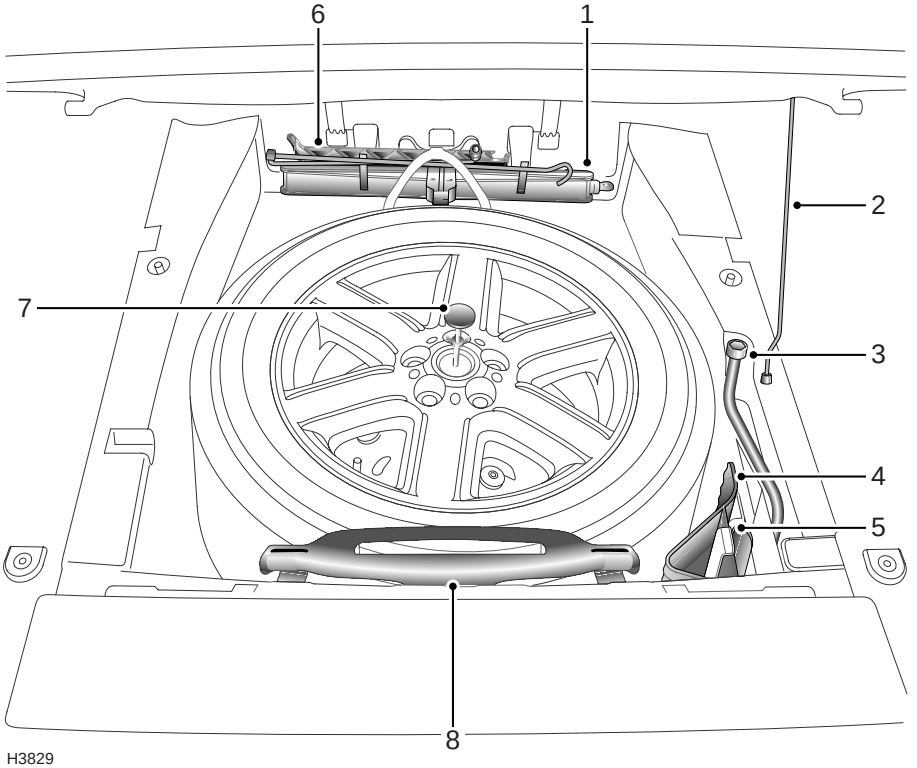

The wheel change tool kit is stowed in the spare wheel well, under an access hatch in the rear loadspace area.

1. Wheel change jack.
2. Spare wheel hatch support stay.
3. Wheel nut brace.
4. Wheel chocks.
5. Tool bag.*
6. Tailgate hinge-stop.*
7. Spare wheel retaining bolt.
8. Spare wheel lifting strap handle.*

WARNING

After wheel changing, always secure tools, chocks, jack and replaced wheel in their correct storage positions. Such objects if not properly stowed can become flying missiles in a crash or rollover, potentially causing injury or death

Care of the jack

Examine the jack occasionally, clean and grease the moving parts, particularly the screw thread, to prevent corrosion. To avoid contamination, the jack should always be stowed in its fully closed position.

WHEEL CHANGING

If possible, choose a safe place to stop away from the main thoroughfare. Always ask your passengers to get out of the vehicle and wait in a safe area away from other traffic.

NOTE: *Switch on the hazard warning lights and set the hazard warning triangle*, a suitable distance behind the vehicle, to alert other road users.*

Before changing a wheel, ensure the front wheels are in the straight ahead position (if possible), apply the parking brake, select 'P' (Park) and select LOW range in the transfer box.

Turn off the starter switch, remove the key and engage the steering lock. Observe the following precautions:

- Ensure the jack will be positioned on firm, level ground; NEVER on soft ground, or over metal gratings or manhole covers. DO NOT place additional material between the jack and the ground, this may jeopardise the safety of the jacking operation.
- Chock both sides of the wheel diagonally opposite the one to be removed.

  If jacking the vehicle on a slope is unavoidable, place the chocks on the downhill side of the two opposite wheels.
- NEVER raise the vehicle with passengers inside, or with a caravan or trailer connected!

Using wheel chocks

WARNING

Before raising the vehicle, as an additional safety precaution, it is advisable to chock the road wheels in two places.

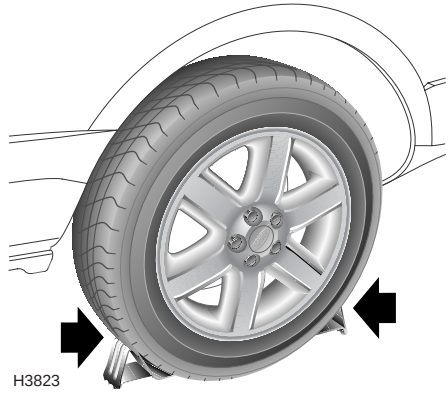

If possible, position the vehicle on level ground, chocking both sides of the wheel diagonally opposite the one to be removed.

If jacking the vehicle on a slope is unavoidable, place the chocks on the downhill side of the two opposite wheels.

The wheel chocks are stowed in the spare wheel well, where shown in *'TOOL KIT', page 234*.

REMOVING THE SPARE WHEEL

WARNING

The wheels are extremely heavy. Take care when lifting and particularly when removing the spare wheel from the rear loadspace and when lifting the replaced wheel back into the spare wheel well.

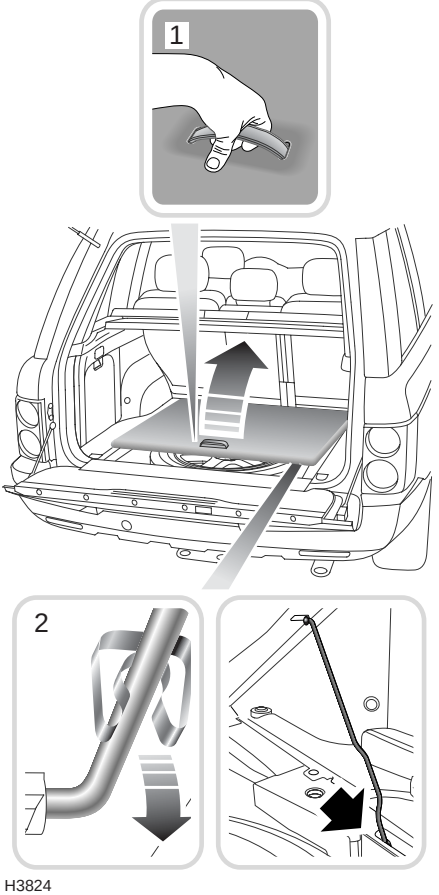

H3824

To access the spare wheel well, it is necessary to fold the rear edge of the loadspace cover forward (see *'LOADSPACE COVER', page 122*, for further details.

With the tailgate open:

1. Lift the handle to open the spare wheel access hatch.
2. Unclip the support stay from the underside of the hatch and slot the end into the hole to the side of the spare wheel aperture (solid arrow in inset), to keep the access hatch open.

   Unhook the wheel changing jack restraining strap and remove the jack and tailgate hinge-stop. Remove the wheel chocks and wheel nut brace (see *'TOOL KIT', page 234*).
3. Loosen the spare wheel retaining bolt wingnut, then unscrew the spare wheel retaining bolt and remove, then fully close the lower tailgate.

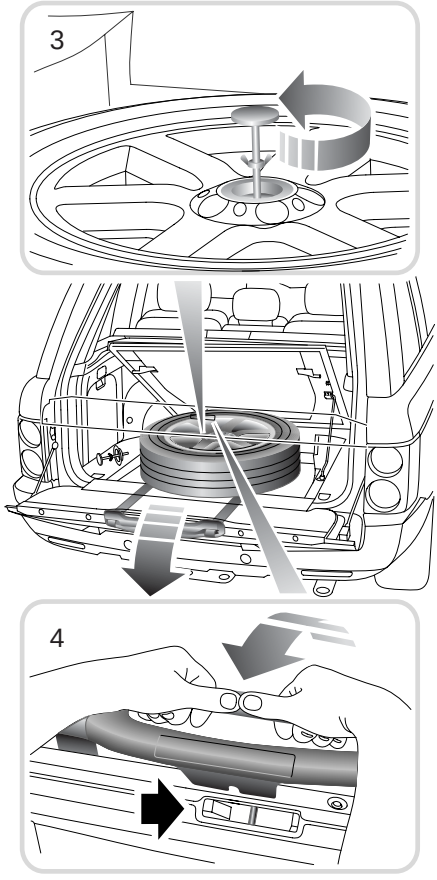

H3825

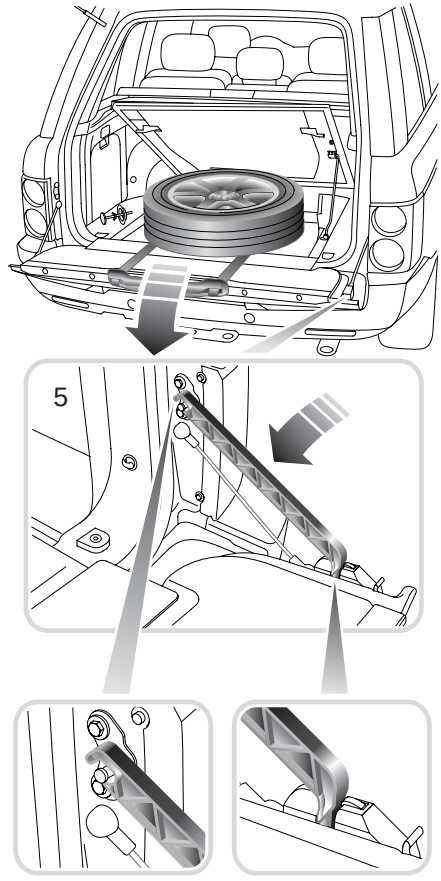

H3826

4. Attach the spare wheel lifting strap handle to the top of the lower tailgate (as inset 4), ensuring that the two lugs engage fully with the corresponding apertures in the top of the tailgate. Once the handle is correctly located, the tailgate is automatically released. Lower the tailgate; the wheel lifting strap automatically raises the wheel out of the spare wheel well and onto the lower tailgate, therefore improving ease of removal.

5. Once the wheel has been lifted onto the tailgate, attach the hinge-stop, to prevent the tailgate from lifting. Remove the spare wheel from the loadspace area.

CHANGING A WHEEL

Positioning the jack

WARNING

NEVER work beneath the vehicle with the jack as the only means of support. The jack is designed for wheel changing only!

To reduce the risk of the vehicle from tipping off the jack, ensure that it is first positioned on firm, level ground.

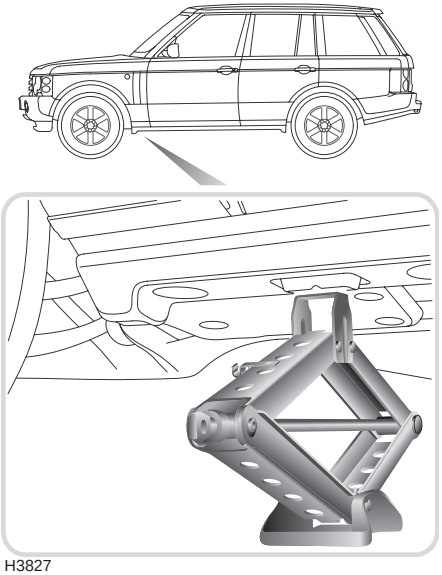

H3827

Front jacking point

Always position the jack from the side of the vehicle, approximately in line with the appropriate jacking point. Ensure the jack is positioned on firm, level ground.

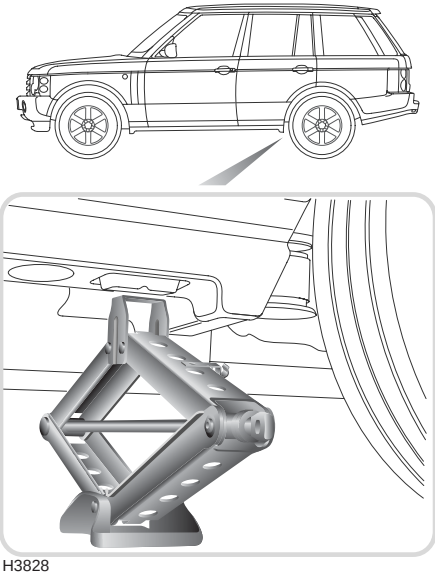

H3828

Rear jacking point

WARNING

ALWAYS use the jack handle throughout to reduce any chance of accidental damage or injury.

Jack the vehicle using only the jack location points described, or damage to the vehicle could occur.

Operating the jack

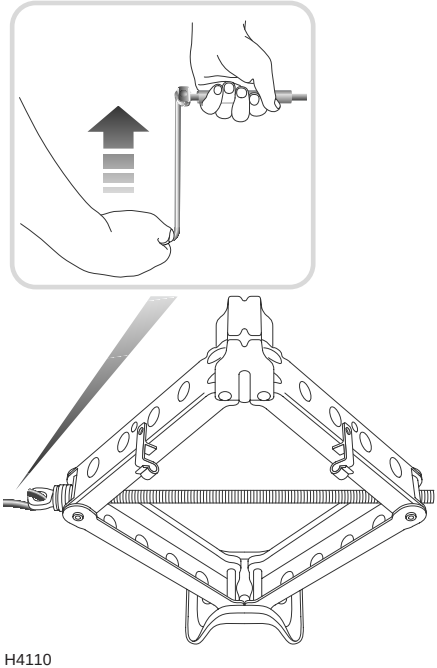

H4110

Position the jack under the relevant jacking point, attach the jack cranking handle to the jack. Turn the jack handle clockwise to raise the jack cradle until it engages with the jacking point. Ensure that the base of the jack is in full contact with the road surface.

Changing a wheel

1. Before raising the vehicle, use the wheel nut brace to slacken the wheel nuts half a turn anti-clockwise.
2. Raise the vehicle until the tire is clear of the ground.
3. Remove the wheel nuts and place to one side to prevent them from being lost.
4. Remove the road wheel.

   NOTE: *DO NOT damage the surface of the wheel by placing it face down on the road.*
5. Use an approved anti-seize compound to treat the wheel mounting bore. This will minimise any tendency for adhesion between the wheel and the bore.

   Ensure that no compound comes into contact with the brake components or the flat mounting surfaces of the wheel.

   If, due to an emergency situation, this treatment is not practicable; refit the spare wheel for the time being, but remove and treat the wheel at the earliest opportunity.
6. Fit the spare wheel and lightly tighten the wheel nuts, ensuring they are firmly seated. DO NOT fully tighten whilst the tire is clear of the ground.

WARNING

When fitting a wheel, ensure that the mating faces of the hub and wheel are clean and free from rust or anti-seize compound - any accumulation of dirt or rust could cause the wheel nuts to become loose and result in an accident.

7. Ensure that the space under and around the vehicle is free from obstructions then lower the vehicle and remove the jack and wheel chocks.

8. Fully tighten the wheel nuts in an alternating pattern until all are tightened. DO NOT OVERTIGHTEN by using foot pressure or extension bars on the wheel stud brace, as this could overstress the wheel nuts. Check the wheel nut torque at the earliest opportunity (see *'WHEELS & TIRES', page 276*).
9. Using a suitable blunt tool, apply light pressure to the rear of the replaced wheel center cap and remove. Using hand pressure only, fit the center cap into the newly fitted wheel. Return tools, chocks, jack and the replaced wheel to their correct storage positions.

   NOTE: *Storing the wheel in the spare wheel well can be achieved by following the full size spare wheel removal procedure in the reverse order.*
10. REMEMBER to change to 'H' (high range) before driving.
11. Finally, check the tire pressure at the earliest opportunity (see *'WHEELS & TIRES', page 276*).

Directional Tires*

Directional tires give greater benefit when they rotate in a forward direction, i.e when the vehicle is moving forward. They give enhanced levels of deep-water grip while still maintaining low tire noise generation.

Should a tire be fitted to a vehicle in the wrong directional sense, these benefits will only be maintained if the tire is remounted to the rim so that it rotates in the direction indicated on the sidewall.

There are two types of directional tire and the direction indicators are shown in the illustration below.

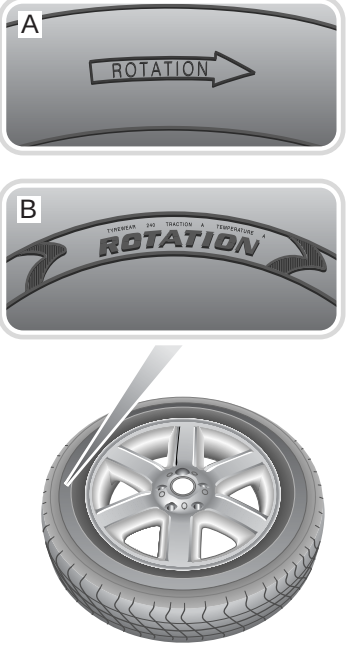

H4562

STARTING AN ENGINE WITH A DISCHARGED BATTERY

Using booster cables (jump leads) from a donor battery, or a battery fitted to a donor vehicle, is the only approved method of starting a vehicle with a discharged battery. This procedure differs to that used to charge a battery, which should not be attempted with the battery connected to the vehicle.

Push or tow starting is NOT recommended!

WARNING

Always wear appropriate eye protection when working with batteries

During normal use, batteries emit explosive hydrogen gas sufficient to cause severe explosions capable of causing serious injury - keep sparks and naked lights away from the engine compartment.

DO NOT attempt to start the vehicle if the electrolyte in the battery is suspected of being frozen.

Make sure BOTH batteries are of the same voltage (12 volts), and that the booster cables have insulated clamps and are approved for use with 12 volt batteries.

DO NOT disconnect the discharged battery.

DO NOT connect positive (+) terminals to negative (-) terminals, and ensure booster cables are kept away from any moving parts in the engine compartment.

Take care when working near rotating parts of the engine.

USING BOOSTER CABLES

If a donor vehicle is to be used, both vehicles should be parked with their battery locations adjacent to each other. Ensure that the two vehicles do not touch.

Apply the parking brakes and ensure that the transmission of both vehicles is set in neutral (‘P’ or Park for vehicles with automatic transmission).

Turn off the starter switch and ALL electrical equipment of BOTH vehicles, then follow the connection instructions on the following page.

CONNECTING THE BOOSTER CABLES

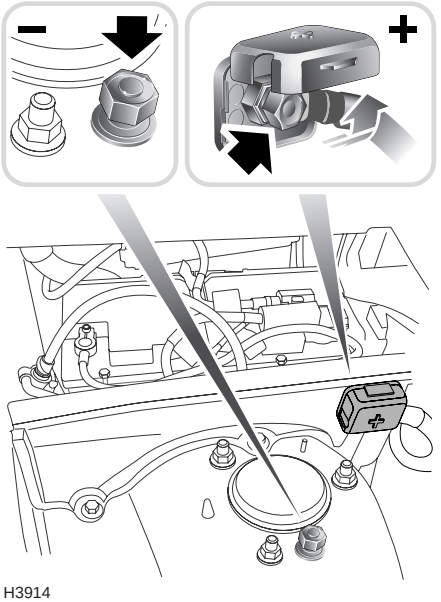

WARNING

ALWAYS use the recommended connection points.

DO NOT attach booster cables to the positive terminal of the vehicle battery. The positive terminal is equipped with a pyrotechnic device, that disconnects the battery as a safety precaution when the vehicle is involved in a collision. Attaching a booster cable to the positive terminal may cause inadvertent firing of the device - this may result in personal injury or death and may damage the vehicle.

ENSURE that each connection is securely made and that there is no risk of the clips accidentally slipping or being pulled from connection points - this could cause sparking, which could lead to explosion or fire.

Booster cable connection points

The booster cable connection points (both negative (-) and positive (+)) located in the engine compartment, are remote from the vehicle battery. These are provided to improve personal safety when attempting to receive or give a booster start.

The positive (+) connection point, shown in the left inset of the illustration, is protected by a cover to prevent an inadvertent connection and to avoid contamination. Open the cover before attempting to connect a booster cable.

The negative (-) connection point is a special nut, located on the suspension turret (see illustration).

Always use these connection points when connecting booster cables and ensure the cables are kept clear of any moving parts in the engine compartment.

RECEIVING A BOOSTER START

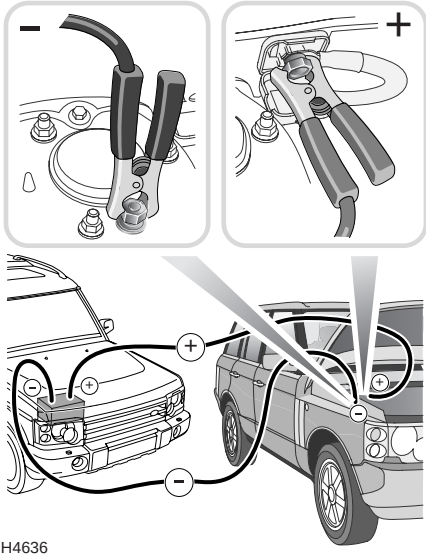

H4636

IMPORTANT INFORMATION

Ensure that you have read and fully understood the information and warnings given earlier in this section (see *'STARTING AN ENGINE WITH A DISCHARGED BATTERY', page 241*, *'USING BOOSTER CABLES', page 241* and *'CONNECTING THE BOOSTER CABLES', page 242*), BEFORE attempting to give or receive a booster start.

WARNING

DO NOT connect the BLACK cable to the negative terminal of the discharged battery - this could cause sparking, which could lead to fire or explosion. Always use the negative (-) connection point. If in doubt, seek qualified assistance.

Always adopt the following procedure, ensuring the cables are connected in the order shown below:

1. Connect one end of the RED booster cable to the positive (+) terminal of the DONOR battery or the donor vehicle's positive (+) connection point.
2. Connect the other end of the RED booster cable to the positive (+) connection point in the engine compartment of the Range Rover (see left inset).
3. Connect one end of the BLACK booster cable to the negative (-) terminal of the DONOR battery or the donor vehicle's negative (-) connection point.
4. Connect the other end of the BLACK booster cable to the negative (-) connection point in the engine compartment of the Range Rover (see right inset).

WARNING

ENSURE that each connection is securely made and that there is no risk of the clips accidentally slipping or being pulled from the connection points/battery terminal - this could cause sparking, which could lead to fire or explosion.

Check that the cables are clear of any moving parts of both engines, then start the engine of the donor vehicle and allow it to idle for a few minutes.

Now start the vehicle with the discharged battery. Once both engines are running normally, allow them to idle for two minutes before switching off the donor vehicle engine.

DO NOT switch on any electrical circuits on the previously disabled vehicle until AFTER the booster cables have been removed.

Disconnecting the booster cables must be an EXACT reversal of the procedure used to connect them, i.e. disconnect the BLACK cable from the negative (-) connection on the Range Rover FIRST.

If the vehicle power supply has been interrupted, ABS and DSC will be deactivated (the relevant warning lights will illuminate). They can be reactivated by driving a short distance or by turning the steering wheel from full lock to lock, with the engine running and the vehicle stationary. The ABS and DSC warning lights will extinguish when the systems are reactivated.

GIVING A BOOSTER START

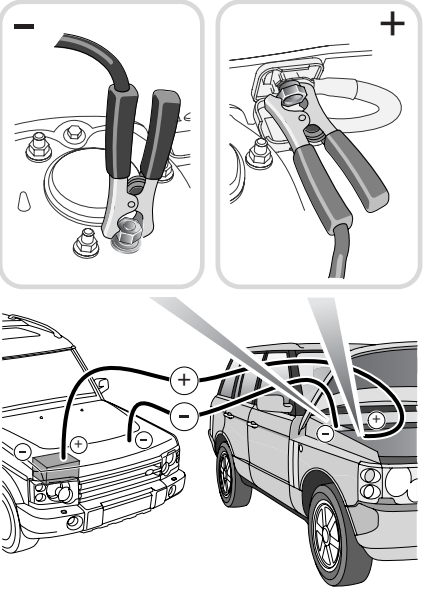

H4637

IMPORTANT INFORMATION
Ensure that you have read and fully understood the information and warnings given earlier in this section (see *'STARTING AN ENGINE WITH A DISCHARGED BATTERY', page 241* and *'CONNECTING THE BOOSTER CABLES', page 242*), BEFORE attempting to give or receive a booster start.

WARNING

DO NOT connect the BLACK cable to the negative terminal of the discharged battery - this could cause sparking, which could lead to fire or explosion. Always use the negative (-) connection point. If in doubt, seek qualified assistance.

Always adopt the following procedure, ensuring the cables are connected in the order shown below:

1. Connect one end of the RED booster cable to the positive (+) connection point (see left inset).
2. Connect the other end of the RED booster cable to the positive (+) connection point (if fitted) on the disabled vehicle, or positive (+) terminal of the discharged battery.
3. Connect one end of the BLACK booster cable to the negative (-) connection point (see right inset).
4. Connect the other end of the BLACK booster cable to the negative (-) connection point (if fitted) on the disabled vehicle, or to a good earth point (e.g. an engine mounting or other unpainted metal surface) at least 0.5m from the battery and well away from fuel and brake lines.

WARNING

ENSURE that each connection is securely made and that there is no risk of the clips accidentally slipping or being pulled from the connection points/battery terminal - this could cause sparking, which could lead to fire or explosion.

Check that the cables are clear of any moving parts of both engines, then start the engine of the donor vehicle and allow it to idle for a few minutes.

Now start the vehicle with the discharged battery. Once both engines are running normally, allow them to idle for two minutes before switching off the donor vehicle engine.

DO NOT switch on any electrical circuits on the previously disabled vehicle until AFTER the booster cables have been removed.

Disconnecting the booster cables must be an EXACT reversal of the procedure used to connect them, i.e. disconnect the BLACK cable from the negative (-) connection on the previously disabled vehicle FIRST.

TOWING EYES

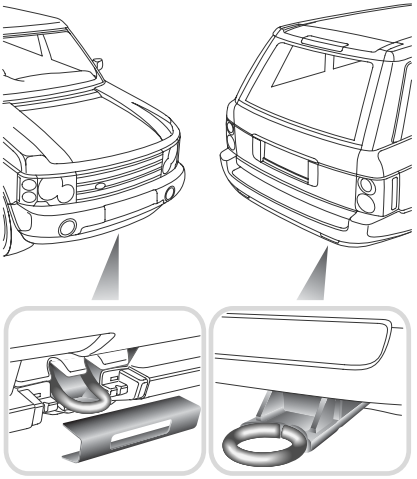

H3899

CAUTION: The towing eyes at the front and rear of the vehicle are designed for on-road vehicle recovery purposes only and must NOT be used to tow a trailer.

Front

A single towing eye, set behind a removable panel in the front spoiler is provided at the front of the vehicle for on-road recovery.

Before driving off-road, remove the panel from the spoiler as a precaution against accidental loss.

Removing the panel: Using both hands, one either side of the towing eye, squeeze the cover and pull away from the vehicle. To replace the cover, push it firmly back into position.

Rear

The towing eye provided at the rear of the vehicle can be used for towing your vehicle or towing another vehicle in recovery situations.

TOWING FOR RECOVERY

Most vehicle recovery specialists will load your vehicle onto a trailer - this is the recommended method. However, if it is necessary to recover the vehicle by towing with all four wheels on the ground, following the procedure for towing the vehicle on four wheels, (see *'TOWING THE VEHICLE ON FOUR WHEELS', page 246*)

TOWING THE VEHICLE ON FOUR WHEELS

WARNING

ALWAYS adhere to the following procedure when towing the vehicle with all four wheels on the ground. Failure to do so could result in unintended vehicle movement or unanticipated vehicle conditions.

When preparing to tow the vehicle on four wheels, it is essential that neutral is selected on the transfer gearbox - before attempting to select transfer neutral, ensure that the parking brake is properly and securely applied.

IMPORTANT INFORMATION

Your vehicle has permanent four-wheel drive and is fitted with a steering lock. The following instructions must be carried out carefully to prevent damage to the vehicle.

CAUTION: Leaving the starter switch in position 'I' or 'II' for extended periods will put a draw on the battery, which can lead to a voltage drop and ultimately to a discharged battery.

1. Secure the towing attachment from the recovery vehicle to the front towing eye of the vehicle to be recovered (see *'TOWING EYES', page 246*).
2. With the parking brake applied, insert the starter key and turn it to position 'II'.

3. Place the gear lever in ‘N’ (neutral).
4. Turn the starter switch to position ‘0’.
5. Insert a fuse (5 amps) into position 37 of the passenger compartment fuse box (see *‘PASSENGER COMPARTMENT FUSE BOX’, page 250*).
6. Turn the starter switch to position ‘II’. The transfer gearbox will automatically select transfer neutral - wait until the message center displays ‘TRANSFER NEUTRAL’.
7. Place the gear lever in ‘P’ (park).
8. Turn the starter switch to position ‘I’ (DO NOT turn the starter switch to position ‘0’).

   NOTE: *The transfer gearbox is now in neutral and the steering wheel is unlocked. The vehicle MUST remain in this condition whilst being towed on all four wheels.*
9. If required, the starter switch may be turned to position ‘II’, to operate the brake lights and direction indicators.
10. Release the parking brake before towing the vehicle.

WARNING

DO NOT remove the key or turn the starter switch to position ‘0’ while the vehicle is in motion.

Without the engine running, the brake servo and power steering pump cannot provide assistance; greater effort will therefore be required to operate the brake pedal and turn the steering wheel. Longer stopping distances will also be experienced.

RECREATIONAL/MOTORHOME TOWING

If you intend to tow your vehicle behind a motorhome or recreational vehicle, follow the procedure specified for ‘TOWING THE VEHICLE ON FOUR WHEELS’. Failure to follow this procedure may result in damage to the transmission.

IMPORTANT INFORMATION

If, for any reason, power from the battery is lost and transfer neutral cannot be engaged, the vehicle can still be towed for up to 6 hours at a maximum speed of 50 mph (80 km/h).

If the main gearbox cannot be set in neutral, the vehicle must not be towed under any circumstances.

After towing on four wheels

To engage the transfer gearbox after towing, perform the following steps:

1. Apply the parking brake and verify that ‘N’ (neutral) is selected in the main gearbox.
2. Turn the starter switch to position ‘0’.
3. Remove the fuse from position 37 of the passenger compartment fuse box.
4. Turn the starter switch to position ‘II’. The transfer gearbox will engage and ‘TRANSFER NEUTRAL’ will extinguish from the message center display. Press the range change switch to select either HIGH or LOW range.
5. Select ‘P’ (park) in the main gearbox.
6. Turn the starter switch to position ‘0’.

TRANSPORTER OR TRAILER LASHING

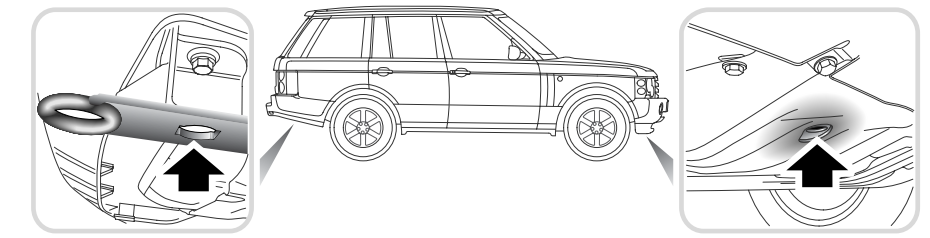

H3986

Pairs of lashing eyes are fixed to the underside of the vehicle - at the front (to the rear of the front wheels) and at the rear (backward of the rear wheels). DO NOT secure lashing hooks or trailer fixings to any other part of the vehicle.

NOTE: *The front and rear lashing eyes are for lashing only and must NOT be used for towing.*

IMPORTANT INFORMATION
Once the vehicle is loaded onto the trailer and if the vehicle electronics are operational, the electronic air suspension (EAS) must be set to Access height. This should be done BEFORE securing the vehicle to the trailer.

FUSES

Fuses are simple circuit devices which protect electrical equipment against the effects of excess current.

A ‘blown’ fuse is indicated when the electrical equipment it protects becomes inoperative.

Fuses are color coded to help identify their amperage, as follows:

Fuse colors

VIOLET	3 amp
TAN	5 amp
BROWN	7.5 amp
RED	10 amp
BLUE	15 amp
YELLOW	20 amp
WHITE	25 amp
GREEN	30 amp
ORANGE	40 amp

Checking or renewing a fuse

Always turn the starter switch to position ‘O’ and switch off the affected electrical circuit before removing a fuse.

WARNING

To prevent a possible fire or damage to the electrical system, fit only replacement fuses of the same rating and type. Do not replace a blown fuse with a fuse of a higher amperage rating. Always rectify the cause of the failure before replacing a fuse. Seek qualified assistance if necessary.

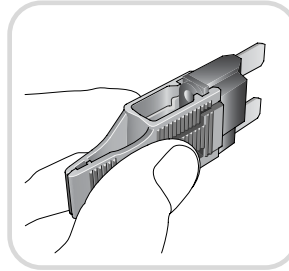

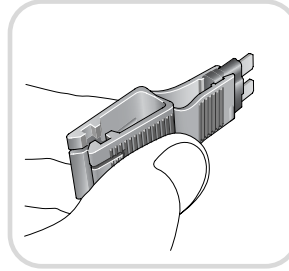

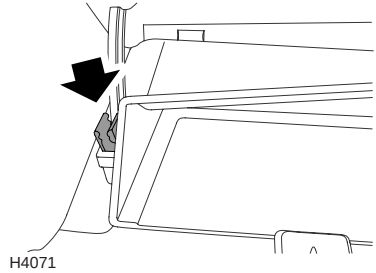

The fuse removal tweezers are located in the glovebox (arrowed in illustration). Press the tweezers onto the head of the suspect fuse (as shown) and pull to remove. A break in the wire inside the fuse indicates that the fuse has 'blown' and must be replaced.

Always replace a fuse with another of the same value, however, if the replacement fuse blows immediately the circuit MUST be checked by a qualified retailer.

PASSENGER COMPARTMENT FUSE BOX

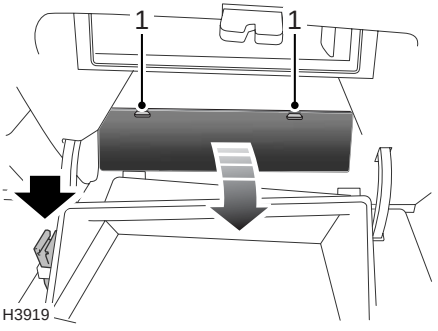

The passenger compartment fuse box is fitted behind the glovebox; to access the fuses, open the glovebox, then press down on the catches (1) whilst pulling the cover rearwards. The solid arrow in the illustration indicates the location of the fuse removal tool.

NOTE: *There are a number of spare fuses included within the fuse box (see fuse box label).*

A label in the fuse box cover shows the circuits protected, the fuse values and their locations. They are also listed on the following page.

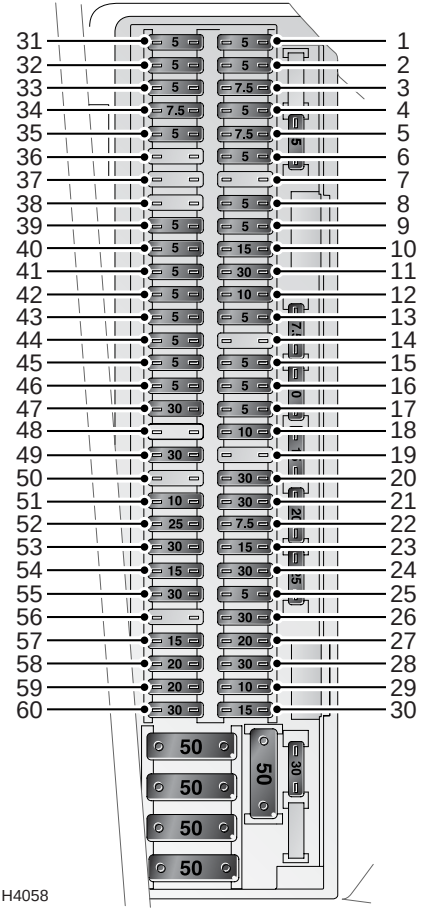

Fuse specification

Fuse number	Rating (amps)	Circuit protected
1	5	Instruments
2	5	Heated rear window, Rear blower, Heated seats - rear, Trailer socket
3	-	-
4	5	Lights
5	7.5	Engine management/Diagnostics
6	5	Rear view mirror, Parking distance control
7	-	-
8	5	On-board computer, Audio system
9	5	Brake lights, Light module, Speed control
10	15	Horn
11	30	Central locking, External mirrors, Electric windows - front
12	10	Air conditioning, Heated seats - front
13	5	Anti-lock Braking System, Dynamic Stability Control, Transmission
14	-	-
15	5	Central locking, Diagnostics, Electric windows - front
16	-	
17	5	Exterior mirrors, Interior lights
18	10	Immobilisation
19	-	-

Fuse number	Rating (amps)	Circuit protected
20	30	Driver's seat, Steering column
21	30	Passenger's seat
22	-	-
23	15	Steering column
24	30	Central locking, Exterior mirrors Electric windows - front
25	5	Immobilisation
26	30	Windshield wipers
27	20	Glove box light, Interior lights, Windshield washers
28	30	Headlight cleaning
29	10	Heated steering wheel
30	15	Electronic damper control
31	5	Engine management, Immobilisation
32	5	
33	5	Transmission
34	7.5	Air conditioning, Blower
35	5	Anti-lock Braking System, Dynamic Stability Control
36	-	-
37	5	Transfer neutral - to be inserted when 4-wheel towing
38	-	-
39	5	Immobilisation
40	5	CD autochanger
41	5	Rear window wash/wipe
42	5	Vanity mirror illumination
43	5	Alarm
44	5	**Airbag SRS - DO NOT REMOVE**
45	5	Instruments

Fuse number	Rating (amps)	Circuit protected
46	5	Instruments
47	30	Heated windshield washers, Heated windshield
48	-	-
49	30	Navigation system, On-board computer, On-board monitor, Audio system
50	-	-
51	10	Anti-lock Braking System, Dynamic Stability Control, Fuel pump, Air pump
52	25	Heated seats - front
53	30	Engine management
54	15	Transmission
55	30	Anti-lock Braking System, Dynamic Stability Control
56	-	-
57	15	Air suspension
58	20	Sunroof
59	-	-
60	30	Central locking, Electric windows - rear

REAR LOADSPACE FUSE BOX

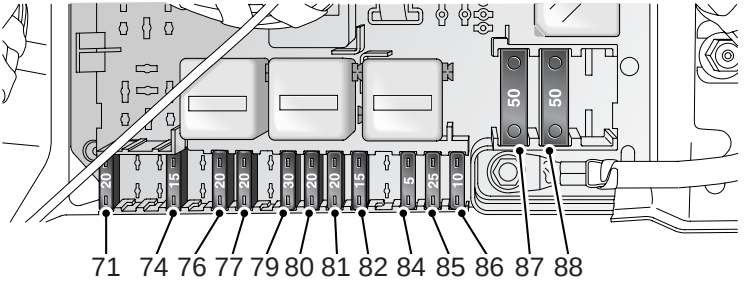

H4053

The fuse box is situated on the right hand side of the loadspace behind the rear loadspace access hatch. Pull the handle to open the panel (see *'REAR LOADSPACE ACCESS HATCH', page 120*).

Owners are advised against removing or replacing the relays (identified as R1-R10) and fusible links (MF1-MF3). Failure of any of these items should be investigated by a qualified technician.

Fuse specification

Fuse number	Rating (amps)	Circuit protected
71	20	Cigar lighter/socket
72	-	-
73	-	-
74	15	Trailer socket
75	-	-
76	20	Trailer socket
77	20	Auxiliary power socket (loadspace)
78	-	-
79	30	Heated rear window
80	20	Rear windshield wash/wipe
81	20	Heated rear seats
82	15	Rear blower
83	-	-
84	5	Remote handset
85	25	Fuel pump
86	10	Central locking system, tailgate
87	50	Trailer socket
88	50	Trailer socket
89	-	-

REPLACING BULBS

Check the operation of all exterior lights before you drive the vehicle.

IMPORTANT INFORMATION
Before replacing a bulb, always switch off the starter switch and appropriate lighting switch to prevent any possibility of a short circuit. Only replace bulbs with the same type and specification.

Replacement bulbs

NOTE: *All bulbs must be rated at 12 volts*

Bulb	Watts
Headlights normal beam (Halogen)	55 (H7)
Headlights high beam	55 (H7)
Front side lights	5
Direction indicators	21
Front fog lights	55 (H7)
Side repeater lights	5
Reverse lights	6 (H6)
Rear fog guard lights	21
Tail lights	5
Number plate lights	5
Door/puddle lights	5
Interior lights	6
Luggage/footwell lights	5
Luggage/tailgate lights	6
Glovebox light	5
Vanity mirror light	1.2

NOTE: *In certain territories it is a legal requirement to carry spare bulbs, in case of bulb failure. A replacement bulb kit is available as an approved accessory from your Land Rover retailer.*

Halogen bulbs

Halogen bulbs are used for high beam, normal beam, front fog and reverse lights. Take care NOT to touch this type of bulb with your fingers; always use a cloth to handle them. If necessary, clean the bulb with methylated spirits to remove fingerprints.

Bi-xenon light units

WARNING

- ***Used Bi-xenon light units contain mercury, which is hazardous and can be injurious to health.***
- ***A very high voltage is required to ignite the gas and metal vapor used to power Bi-xenon lights. Contact with this voltage could cause very serious injury.***
- ***Replacement or maintenance of xenon lights should be carried out only by qualified personnel.***

Some vehicles are fitted with Bi-xenon low beam headlight units. Bi-xenon lights provide significantly improved visibility, especially during adverse weather and driving conditions.

The operational life of a Bi-xenon light is significantly longer than that of a conventional or halogen bulb.

Seek advice about the proper disposal of Bi-xenon light units from a Land Rover retailer.

Light emitting diodes (LEDs)
Controls, displays and some lights and other equipment items inside your vehicle have light emitting diodes (LEDs) behind a cover as their light source. These LEDs resemble conventional lasers and are classified by law as “Class 1 light emitting diodes”. Replacement LEDs should be fitted only by qualified personnel.

WARNING

DO NOT remove the cover or expose the eyes directly to the unfiltered light source for several hours at a time, as this could cause irritation to the iris.

HEADLIGHT HIGH BEAM (HALOGEN)

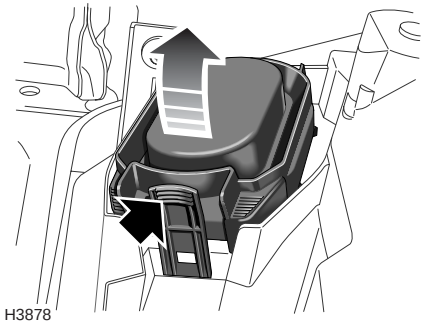

From inside the engine compartment, press the tab (solid arrow) and open the cover.

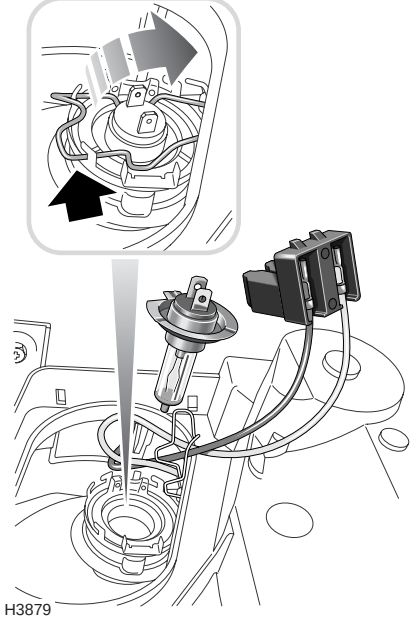

Bulb Replacement

Disconnect the electrical connector and release the spring clip (see inset). Pull the bulb out to remove.

NOTE: *Do not touch the replacement bulb glass with your fingers. If necessary, clean the bulb with methylated spirits.*

FRONT DIRECTION INDICATOR, SIDELIGHT AND FRONT SIDE MARKER LIGHT

Light unit removal

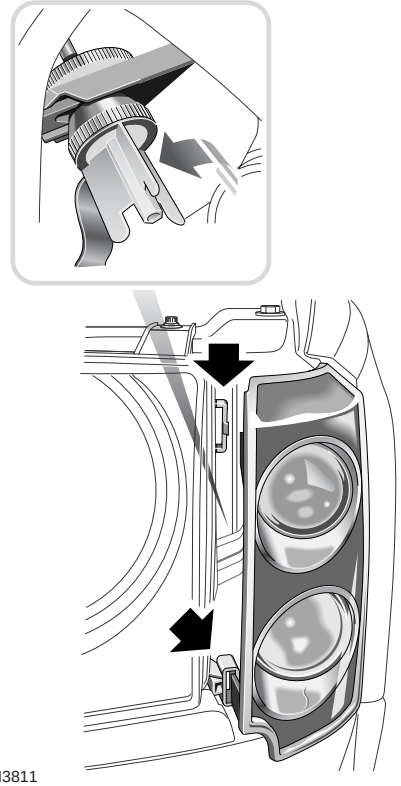

From inside the engine compartment, unscrew the nut (anti-clockwise), to release the light unit (see inset). The nut is attached to a safety strap, which prevents it from falling into the engine.

Keeping hold of the light unit, ease it away from the vehicle body, disengaging the two locating lugs (arrowed).

Bulb replacement

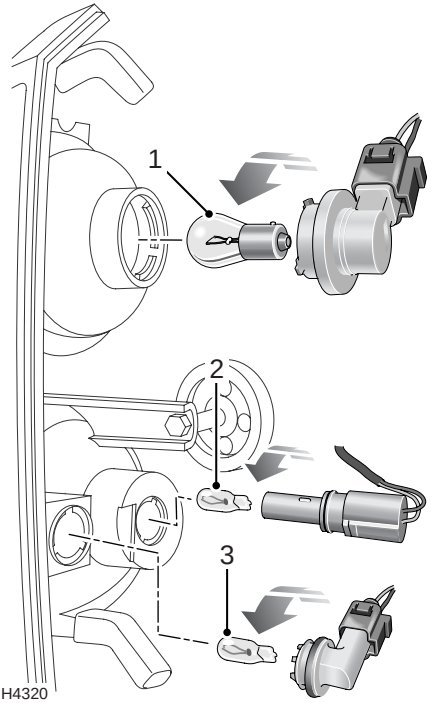

1. Direction indicator light
2. Sidelight
3. Front side marker light

Having released the light unit form the front of the vehicle, turn the relevant bulb holder 90º anti-clockwise and pull to release. Twist and pull to remove the direction indicator bulb, pull to remove either of the other bulbs.

Refitting the light unit

When refitting the light unit, position the two lugs first, then position the light unit, so that the securing bolt lines up correctly with the thumbwheel. Tighten the nut (turn clockwise) to fix the unit in position.

REAR LIGHT CLUSTER
(Tail, indicator & fog lights)

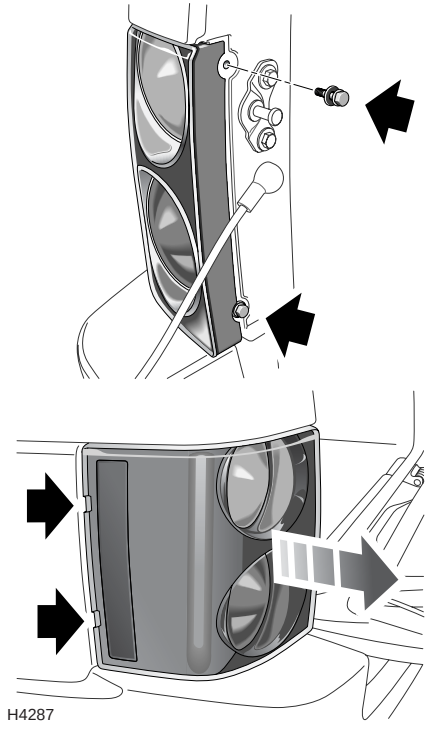

From outside the vehicle and with the tailgate fully open, remove the two retaining screws (as shown). From the side of the vehicle, use a suitable tool to carefully lever the unit away from the vehicle and rearwards, to release the light unit from the vehicle.

Be careful to avoid damage to the paintwork, when levering the light unit from the vehicle. Cover any tool used with a cloth and apply gentle and constant pressure. Do not use excessive force - if in doubt, consult your retailer.

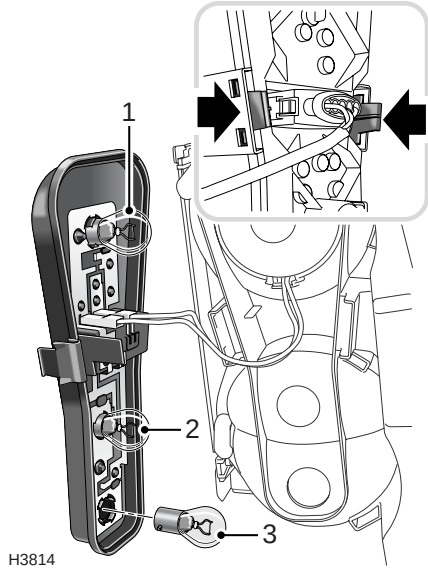

Press the two tabs (arrowed in inset) together, to release the light unit from the lens assembly. Twist and pull the appropriate bulb to release.

The bulbs are located as follows:

1. Rear indicator bulb.
2. Tail light bulb.
3. Rear fog guard light bulb.

NOTE: *The brake lights and high mounted stop light fitted to your vehicle, are LED lights and should be replaced by your retailer if they fail.*

REAR SIDE MARKER LIGHTS

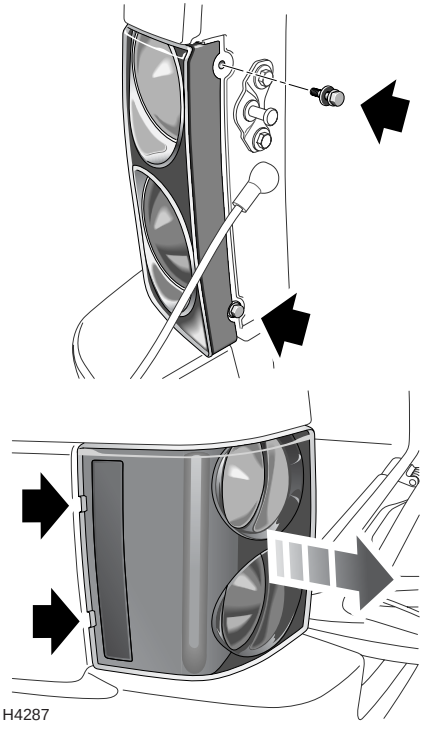

H4287

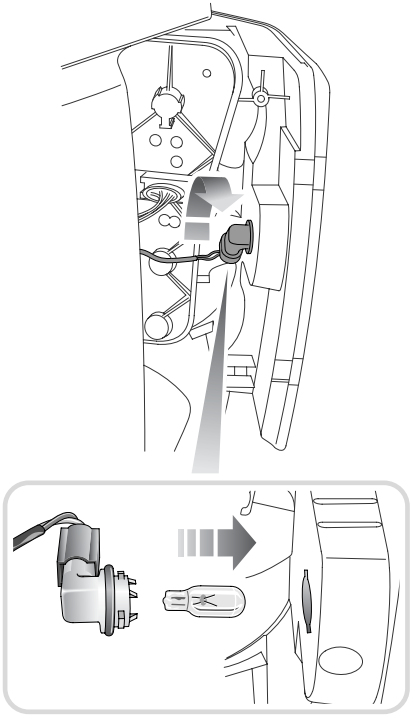

H4288

From outside the vehicle and with the tailgate fully open, remove the two retaining screws (as shown). From the side of the vehicle, use a suitable tool to carefully lever the unit away from the vehicle and rearwards, to access the side marker bulb holder.

Be careful to avoid damage to the paintwork, when levering the light unit away from the vehicle. Cover any tool used with a cloth and apply gentle and constant pressure. Do not use excessive force - if in doubt, consult your retailer.

Twist the bulb holder to release it from the light unit (as arrowed in illustration), then pull the bulb to remove (see inset).

REVERSE LIGHTS

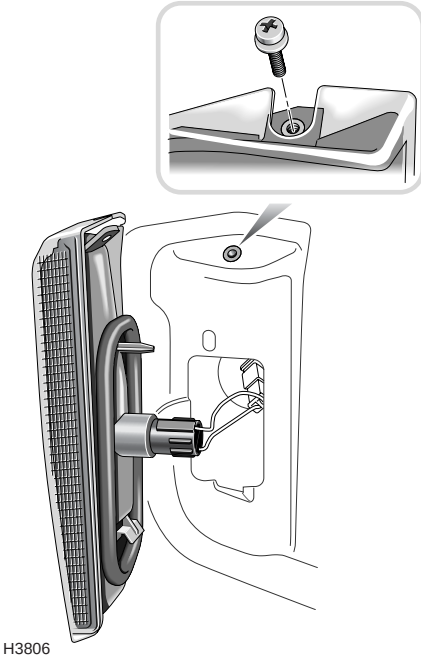
H3806

The reverse lights are located on either side of the rear number plate, mounted on the lower tailgate.

With the upper tailgate raised, remove the screw (see inset) to release the light unit from the tailgate.

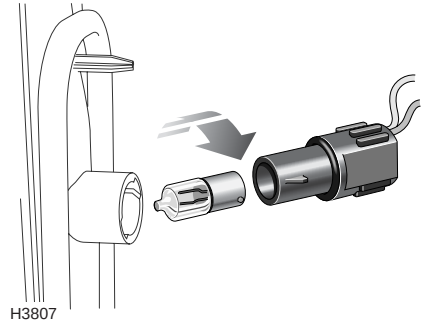
H3807

Twist and pull the bulb holder to release from the rear of the light unit, then pull the bulb to remove.

NOTE: *Do not touch the replacement bulb glass with your fingers. If necessary, clean the bulb with methylated spirits.*

NUMBER PLATE LIGHTS

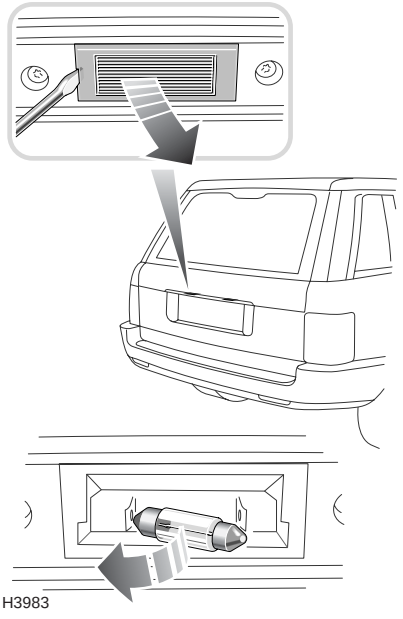

With the upper tailgate open and using a suitable tool, lever the lens from the tailgate (see inset). Pull the bulb to remove.

SIDE REPEATER LIGHT

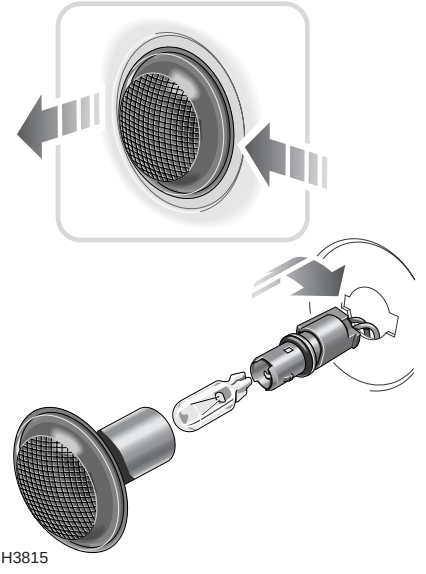

Push the lens firmly towards the front of the vehicle and withdraw the light unit from the wing. Twist to release the bulb holder from the lens unit, then pull the bulb from its socket.

FRONT FOG LIGHTS

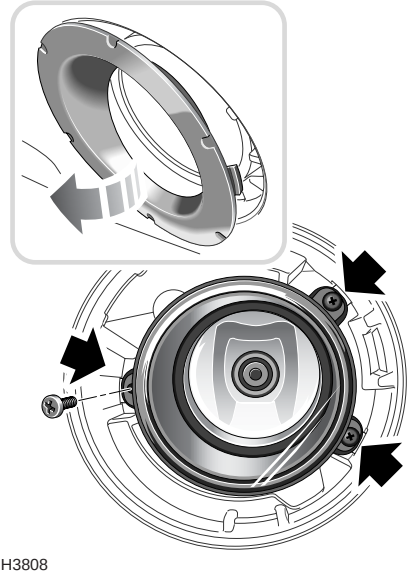

H3808

To access the bulb; using a suitable tool, lever the fog light surround panel out of the front bumper. Remove the three securing screws to release the light unit. Ease the unit out of the front bumper.

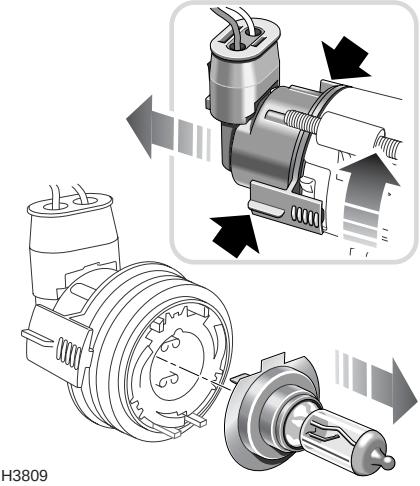

H3809

Depress the two catches (solid arrows in upper inset), then twist and pull to remove the bulb holder from the lens assembly. Pull the bulb from the holder to remove.

Before fitting the replacement bulb, note the ‘flat’ and the tab on the otherwise circular shape of the bulb mounting flange. The tab acts as a key to enable correct positioning of the bulb in the bulb holder.

NOTE: *Do not touch the bulb glass with your fingers. If necessary, clean the bulb with methylated spirits.*

DOOR/PUDDLE/LOWER FOOTWELL LIGHTS

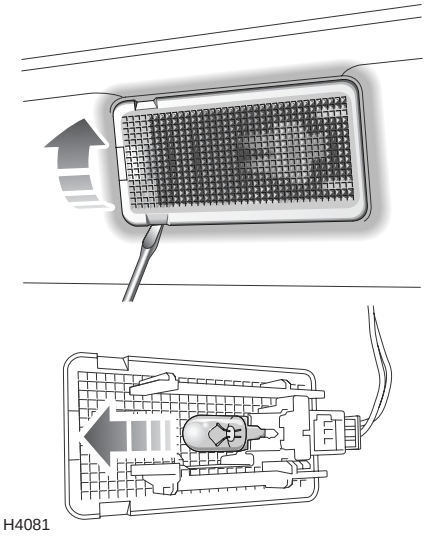

With the relevant door open, insert a small flat-bladed screwdriver under the forward edge of the lens. to lever the light unit out of the door. Pull the bulb out to remove.

GLOVEBOX LIGHT

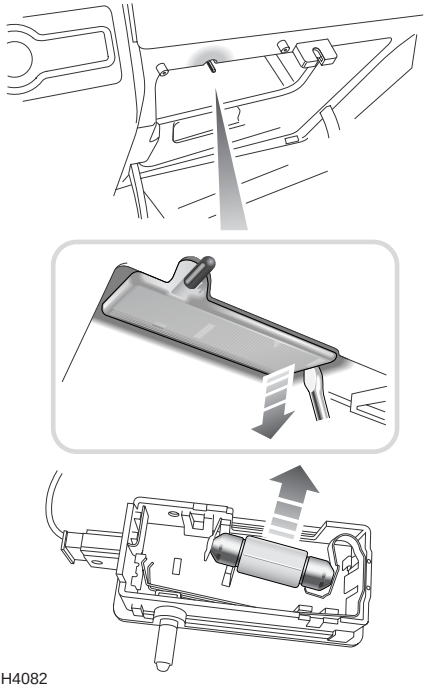

Insert a small flat-bladed screwdriver into the indent (see inset) on the side of the light unit, and carefully prise the unit from the glovebox panel. Remove the bulb from its clips.

UPPER FOOTWELL LIGHTS

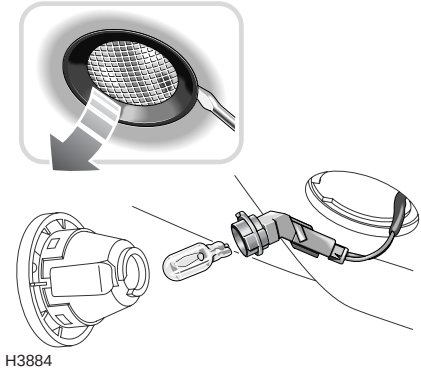

H3884

Insert a small flat-bladed screwdriver under the side of the light unit and carefully prise the unit out of the footwell.

Twist and pull the bulb holder access the bulb and pull the bulb to remove.

LUGGAGE LIGHTS

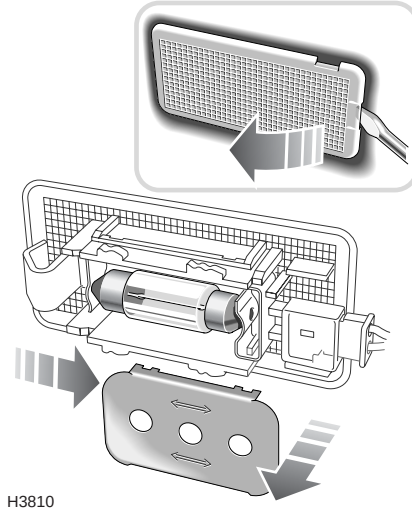

H3810

Insert a small flat-bladed screwdriver into the indent on the side of the lens and carefully prise the lens from the light unit (see inset).

Slide the metal plate to the right and then pull away from the back of the light unit (see main illustration). Pull the bulb to remove.

TAILGATE LIGHT

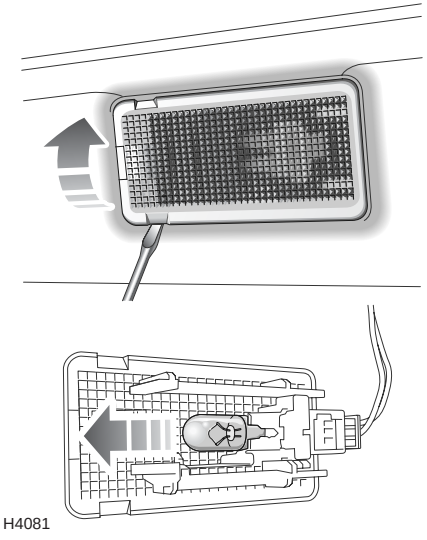

Insert a small flat-bladed screwdriver under the lens and carefully prise the lens from the light unit. Pull the bulb to remove.

MAP LIGHT

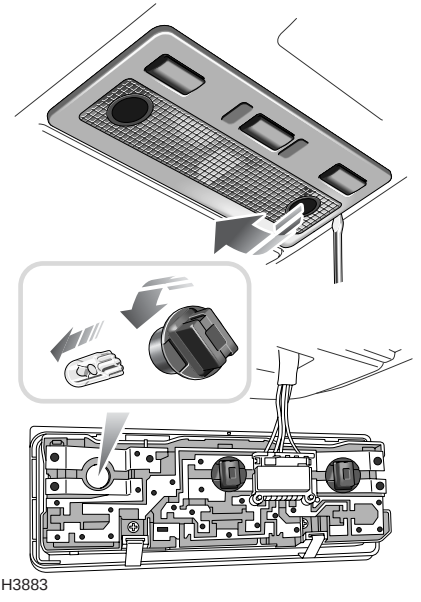

Insert a small flat-bladed screwdriver into the indent on the side of the lens (as illustrated) and prise the lens from the light unit. Twist the relevant bulb holder anti-clockwise and withdraw from the light unit, then pull the bulb out to remove.

VANITY MIRROR LIGHT

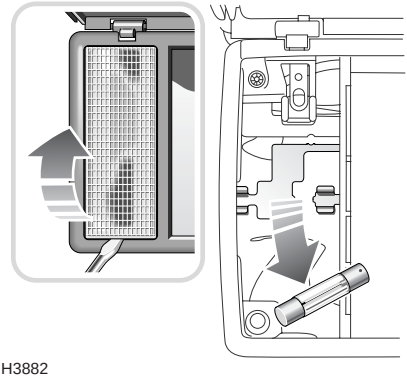

H3882

With the vanity mirror cover open, use a small flat-bladed screwdriver to lever the relevant lens from the mirror/light unit. Pull out bulb to remove.

Technical Data

Lubricants & Fluids
LUBRICANTS AND FLUIDS 271

Capacities
CAPACITIES. 272

V8 Engine
V8 ENGINE. 273

Electrical System
ELECTRICAL SYSTEM 274

Steering
STEERING 275

Wheels & Tires
WHEELS & TIRES 276
. 278

Vehicle Weights
VEHICLE WEIGHTS 279

Towing Weights
TOWING WEIGHTS 280

Dimensions
DIMENSIONS. 281

LUBRICANTS AND FLUIDS

Recommendations for all climates and conditions.

NOTE: *Recommended oils are complete in themselves and additives should not be used.*

NOTE: *It is essential to change oil much more frequently if the vehicle is operated under severe conditions, especially if deep wading is carried out.*

Engine oil

Use a 0W/30, 0W/40, 5W/30 or 5W/40 oil meeting API service level SJ/CD, EC11 and having a viscosity band recommended for the temperature range of your locality.

NOTE: *Use only synthetic oils.*

Engine oil temperature ranges

0W/30 will protect from -22ºF (-30ºC) to 95ºF (35ºC).

0W/40 will protect from -22ºF (-30ºC) to 122ºF (50ºC).

5W/30 will protect from -22ºF (-30ºC) to 95ºF (35ºC).

5W/40 will protect from -22ºF (-30ºC) to 122ºF (50ºC).

Main gearbox

Filled for life. Esso LT71141.

Power steering

Texaco Cold Climate PAS fluid 14315 or service part number LRN2261 - ACE/PAS fluid.

Brake reservoir

Any brake fluid having a minimum boiling point of 500ºF (260°C) and complying with FMVSS 116 DOT4.

Windscreen washers

Screen washer fluid.

Engine cooling system

Use Castrol Anti-freeze NF, Texaco AFC or service part number LRN6024. Use one part anti-freeze to one part water for protection down to -36° C.

Inertia reel seat belts

DO NOT LUBRICATE. These components are lubricated for life during manufacture.

CAPACITIES

The following capacities are approximate and provided as a guide only. All oil levels must be checked using the dipstick or level plugs as applicable.

	US Units	Metric Units
Fuel tank	26.4 gal	100 litre
Engine oil (from dry)	9.6 quarts	9.1 litre
Engine oil refill and filter change	9 quarts	8.5 litre
Washer reservoir	5.3 quarts	5.0 litre
Cooling system (fill from dry)	18.3 quarts	17.3 litre
Cooling system (refill)	13.7 quarts	13 litre

V8 ENGINE

Fuel	Premium unleaded gasoline with a CLC or AKI octane rating of 90 or 92 (95 or 96 RON) - see *'TYPE OF FUEL', page 139*
Capacity	268 in^3 (4398 cm^3)
Firing order	1-5-4-8-6-3-7-2
Idle speed	600 +/- 50 rev/min
Bore	3.622 in (92.0 mm)
Stroke	3.256 in (82.7 mm)
Number of cylinders	8
Compression ratio	10:1
Spark plugs	Bosch FGR7DQP or NGK BKR6EQUP
Spark plug gap	Non-adjustable

ELECTRICAL SYSTEM

Battery type	Group 95R, sealed for life
Battery rating	90 amp/hr or 110 amp/hr
Voltage and polarity	12 V, negative (-) earth
Charging circuit	Alternator

STEERING

Steering wheel turns lock to lock	3.5
Turning circle	38 ft (11.6 m)
Camber angle	-0.2°
Castor angle	6.69°
King pin inclination	11.76°
Front wheel toe-out included angle	0°

WHEELS & TIRES

WARNING

- ***ALWAYS use radial-ply tires front and back. DO NOT use bias-ply tires, or interchange tires from front to back.***
- ***For optimum performance and handling ALWAYS replace tires with the same make and type as those fitted from new at the factory. If these tires are not available, consult your retailer for advice on Land Rover approved alternatives. Failure to do so may adversely affect vehicle handling.***
- ***NEVER drive your vehicle if the tires are badly worn, cut or damaged, or if the pressures are incorrect.***
- ***Incorrectly inflated tires wear rapidly and can seriously affect the vehicle's safety and road handling characteristics.***
- ***Your vehicle is fitted with tubeless road wheels that will NOT accept inner tubes. DO NOT fit a tube tire.***
- ***ONLY Land Rover approved wheel and tire combinations should be fitted to the vehicle.***

Wheel size and type

Type	Size
Alloy wheels	7.5J x 18 8J x 19
Road wheel nut torque to hub	103 lbf/ft (140 Nm)

Tire specification

Wheel size	Tire	Snow Chain Fitment	
		Front	Rear
7.5J x 18	255/60 R18 H - All terrain tire	N	Y
8J x 19	255/55 R19 H - All terrain tire	N	Y

NOTE: *Unidirectional tires may be available for the above wheels, see ‘Directional Tires*’, page 221 and ‘Directional Tires*’, page 240.*

Recommended tire inflation pressures

Loading condition		lbf/in^2	kPa
Normal operating conditions	Front	34	230
	Rear	36	250
Vehicle loaded to maximum gross vehicle weight	Front	36	250
	Rear	44	300

NOTE: *The pressure for your spare tire should be set to the highest value given for your vehicle's wheel/tire size combination, and adjusted after fitment.*

NOTE: *When towing a heavily laden trailer, tire pressures should be increased to the maximum specified in the handbook, and road speeds limited to 60 mph (100 km/h).*

Tire inflation pressure

It is important that tires be properly inflated. Air pressure enables a tire to support the vehicle load, so proper inflation is critical. Failure to maintain correct inflation pressures may result in rapid and uneven tread wear, erratic vehicle handling and excessive heat build-up, which may result in tire failure.

It is impossible to determine if a tire is properly inflated just by looking at it.

Tire pressures listed on the vehicle certification label are considered to be the recommended cold tire inflation pressure, at maximum gross vehicle weight condition, measured when the tires are **cold**, after the vehicle has been parked for at least 3 hours or driven less than 3 miles (5 km). Tire pressures at normal opertaing conditions are shown in the table above.

When you drive for more than 3 miles (5 km), the tires, and the air inside them, warm up and it is normal for the tire pressure to increase above the recommended cold pressure. When checking tire pressure in this condition, never 'bleed' or reduce air pressure.

WARNING

If the vehicle has been parked in strong sunlight or used in high ambient temperatures, DO NOT reduce tire pressures; instead, move the vehicle into the shade and allow the tires to cool before checking.

NOTE: *A hot tire at or below recommended cold inflation pressure is dangerously under-inflated.*

Accessory wheels - insert details

Wheel size	Tire	Snow Chain Fitment	
		Front	Rear
		N	Y

Accessory tires - insert details

Loading condition		lbf/in^2	kPa
Normal operating conditions	Front		
	Rear		
Vehicle loaded to maximum gross vehicle weight	Front		
	Rear		

NOTE: *Accessory fit off-road tires (with a speed rating of Q or T) are subject to speed restrictions. Q-rated tires should not be used at speeds greater than 100 mph (160 km/h); T-rated tires should not be used at speeds greater than 118 mph (190 km/h).*

VEHICLE WEIGHTS

DEFINITIONS:

- **Curb Weight:** minimum unladen vehicle weight plus a full fuel tank.
- **Gross Vehicle Weight:** maximum permissible weight of vehicle with driver, passengers, payload equipment and towing attachment load (where applicable)

Approximate curb weights	
- All vehicles	5379 - 5666 lb (2440 - 2570 kg)
Maximum gross vehicle weight	
- All vehicles	6724 lb (3050 kg)
Maximum front axle load	
- All vehicles	3373 lb (1530 kg)
Maximum rear axle load	
- All vehicles	4078 lb (1850 kg)

NOTE: *Axle weights are non-additive, i.e. maximum gross vehicle weight is not calculated by adding together maximum front and rear axle loads. The individual maximum axle weights and gross vehicle weight must not be exceeded.*

TOWING WEIGHTS

Maximum permissible towed weights	On-road	Off-road
Unbraked trailers	1653 lb (750 kg)	1653 lb (750 kg)
Trailers with overrun brakes	7716 lb (3500 kg)	2204 lb (1000 kg)
Roof rack load (including the mass of roof rack)	220 lb (100 kg)	110 lb (50 kg)

NOTE: *Driving off-road with a loaded roof rack is not recommended.*

Maximum tow hitch load (tongue weight)
If the vehicle is loaded to the Gross Vehicle Weight (GVW), the tongue weight is limited to 330 lb (150 kg). If a greater tongue weight is necessary (up to 550 lb (250 kg) maximum), vehicle loading should be adjusted to ensure the GVW and rear axle weights are not exceeded.

DIMENSIONS

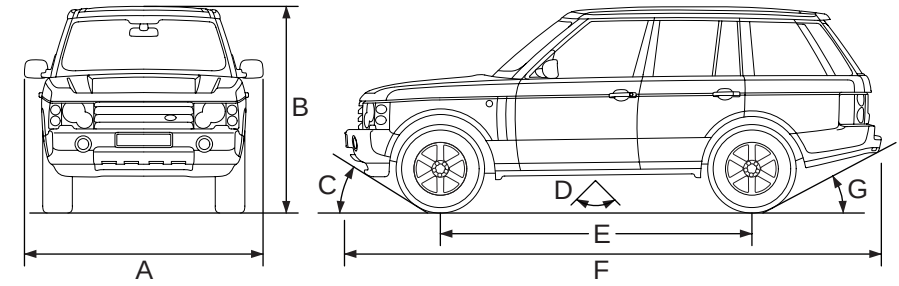

H3769

A	Overall width	86.3 in (2191 mm)
	Overall width (mirrors folded)	79.1 in (2009 mm)
B	Overall height - Access height - Motorway height - Standard height - Off-road height	 71.7 in (1820 mm) 72.4 in (1840 mm) 73.3 in (1863 mm) 75.3 in (1913 mm)
E	Wheelbase	113.4 in (2880 mm)
F	Overall length	195 in (4950 mm)
	Overall length (including tow hitch - to center of tow ball)	197.4 in (5015 mm)
	Track: - Front - Rear	 64.1 in (1629 mm) 64.0 in (1626 mm)

Off road performance

C	Approach angle	32°
D	Breakover angle	28°
G	Departure angle without tow hitch	25°
	Departure angle with tow hitch: - Standard ride height - Off-road ride height	 15.1° 17.4°
	Wading depth	20 in (500 mm)
	Minimum ground clearance (off-road height)	11.06 in (281 mm)

Index

A

Accessories 228
Aerial 125
Air blower control 103
Air cleaner element renewal 204
Air conditioning 102
Air conditioning control 104
Air distribution control 103
Air recirculation 104
  remote operation* 108
Air suspension
  access height 164
  crawl mode 165
  motorway height 163
  off-road height 164
Air temperature controls 103
Air vents 100
Air vents (rear) 101
Airbag SRS
  cleaning 225
  disposal 69
  location 62
  occupant detection 64
  operation 64
  precautions 68
  servicing 68
  warning light 67
Airbag warning labels 23
Airbags
  side 66
Alarm 5, 32
  partial arming 34
Alarm indicator light 35
Anti-freeze 209
Anti-lock braking (ABS) 155
Anti-theft alarm 5, 32
Approach lights 109
Armrests
  rear 48
Armrests (front) 47
Ash trays 111
Audible warnings 86
Audio 125
Audio equipment 125
Auto safety hotline 21
Automatic transmission 144
Auxiliary equipment (use of) 135
Auxiliary power socket 113
Axle loads 279

B

Battery
  charging 216
  disposal 216
  jump starting 241
  maintenance 215
  remove & replace 216
  replacement 216
  safety 215
  specification 274
Battery disconnection - effects 216
Bi-Xenon light units 171
Blower control 103
Booster cables 242
  connection points 242
Booster starting
  starting another vehicle 244
  starting your vehicle 243
Brake fluid
  fluid check & top-up 210
  replacement 195
  specification 210
Brakes
  anti-lock brakes (ABS) 155
  brake pads 154
  cornering control 156
  dynamic control 156
  electronic brake force distribution (EBD) 156
  foot brake 154
  handbrake 157
  servo assistance 154
  warning light (ABS) 155
Breaking-in 134

Index

Bulb replacement 255
direction indicators 258
door lights 264
footwell light 265
front fog lights 263
glovebox light 264
headlight main beam 256
luggage light 265
luggage/tailgate light 266
map light 266
number plate lights 262
puddle lights 264
rear fog guard lights 259
rear indicators 259
reverse lights 261
side marker lights - front 262
side marker lights - rear 260
sidelights 258
tail lights 259
vanity mirror light 267

C

California Proposition 65 21
Capacities 272
Carpets (cleaning) 225
Catalytic converter 136
Certification label 227
Check control 74
Child restraints
LATCH anchorages 60
tether straps 59
Child seats 57, 67
Child-proof door locks 40
Chocks 235
Cigar lighter 111
Cleaning (exterior) 223
Cleaning (interior) 225
Clock 110
setting the time 110
Cold climates (starting) 132
Controls
facia 30
Coolant
check & top-up 208
replacement 195
specification 209
Cooling system 208
Cornering brake control 156
Courtesy lights
operation 109
Cruise control 152
Cubby box 117
Cup holder (large) 115
Cup holders 114

D

Demisting 105
Dimensions 281
Direction indicators
bulb replacement (front) 258
operation 88
Directional tires 221, 240
Door mirrors 71
Door seals
prevention of freezing closed 197
Door/puddle lights
bulb replacement 264
Drive-away locking 37
Driving 133, 136, 148
Dynamic brake control 156
Dynamic stability control 158

E

Earth point 242
Electric windows 95
Electronic traction control 159
Emergency starting 241
Emergency towing 246
Emission control system 135, 197
Engine
breaking-in 134
compartment (petrol) 199
data 273
starting 132
warming-up 133, 189
Engine compartment labels 24
Engine immobilisation 38
Engine oil
check & top-up 200
disposal (used oil) 197, 201
drain & refill 201
filter renewal 203
specification 200
Exterior mirrors 71

F

Face level vents 100
Fan speed control 103
Filler flap emergency release 141
Fluid specifications 271
Fog guard lights
  bulb replacement 259
Fog lights (front)
  bulb replacement 263
  operation 88
Fog lights (rear)
  operation 89
Footwell light
  bulb replacement 265
Four wheel towing 246
Fuel
  economy 134, 191
  empty tank 140
  filler 138
  filling 140
  gauge 73
  octane enhancers 139
  safety 138
  specification 139
  tank capacity 272
Fuel filler flap emergency release 141
Fuse box
  main (passenger compartment) 250
  rear loadspace 254
Fuses 249
  main fuse box 250
  rear loadspace 254

G

Gas station safety 138
Gauges
  fuel 73
  speedometer 73
  tachometer 73
  temperature 74
Gear selection
  sport mode 146
Gear selector display 81
Gearbox (automatic)
  automatically selected modes 149
  CommandShiftTM selection 147
  'kick-down' 148
  lever positions 145
  selector release button 144
  starting 148
Gearbox (transfer box) 150
General data 271
Glovebox light
  bulb replacement 264
  operation 109
Gross weights 279
Ground clearance 177

H

Halogen bulbs 255
Handbrake 157
Handset
  battery replacement 39
  operation 5, 32
  replacement 29
Hazard warning lights 89
Head restraints 47
Headlight courtesy delay 87
Headlight main beam
  bulb replacement 256
Headlight washers 213
Headlight wiper blade replacement 214
Headlights
  bulb replacement 256
  operation 87
  washers 92
Heated rear window 104
Heated rear windshield
  cleaning 225
Heated seats
  front 102, 107
  rear 107
Heated steering wheel 108
Heated windshield* 104
Heater
  operation 105
Heating 105
  engine off 103
  park 103
Height (of vehicle) 133

Index

Hill descent control (HDC)
  operation 160
  warning lights 161
HomeLink® 126
  accessories 128
  compliance 128
  erasing channels 128
  operation 127
  precautions 126
  programming 126
  'rolling codes' 127
Hood opening 198
Horn 94

I

Ignition switch 131
In-car entertainment 125
Indicators
  bulb replacement 258, 259
  operation 88
Information labels 22
Instrument panel
  cleaning 225
  instruments 73
  warning lights 82
Instrument panel lights
  operation 87
Interior (cleaning) 225
Interior lights
  operation 109
Interior locking switch 36
Interior rear-view mirror 118
Interior space protection 37

J

Jack (wheel changing) 234
Jacking the vehicle 239
Jump leads 242
Jump starting
  starting another vehicle 244
  starting your vehicle 243

K

Key/handset numbers 29
Keys 29
Kick-down 148

L

Labels 22, 23
LATCH child restraint anchorages 60
Leather cleaning 225
Light emitting diodes (LED's) 256
Lights
  approach 109
  headlight courtesy delay 87
  parking 88
Lights (exterior)
  direction indicators 88
  side,tail, headlights 87
Lights (interior)
  courtesy 109
  glovebox 109
  loadspace 109
Load carrying
  luggage anchor points 170
  rear seat folding 51
  roof rack 170
Loadspace cover 122
Loadspace fuse box 254
Loadspace light
  operation 109
Locking 5, 32, 36, 40
Locking (drive away) 37
Locking switch (interior) 36
Lubricant specifications 271
Luggage anchor points 119, 170
Luggage light
  bulb replacement 265
Lumbar support adjustment 46

M

Main fuse box 250
Maintenance 22, 195
Map light
  bulb replacement 266
Message center
  critical warnings 77
  information 77
  warning messages 77
Mirror (interior) 118
Mirrors (exterior)
  adjustment 71
  cleaning 224
  folding 72
Motorhome towing 247

Index

N

Number plate lights
  bulb replacement 262

O

Octane enhancers 139
Odometer (distance recorder) 74
Off-road driving 156, 175
Off-road suspension control 162
Oil (engine)
  check & top-up 200
  disposal 197, 201
  drain & refill 201
  filter renewal 203
  specification 200
Owner maintenance 195

P

Park heating 103
Parking lights 88
Parts & accessories 228
Poisonous fluids 197
Polishing (the bodywork) 224
Power socket 113
Power steering
  emergency operation 211
  fluid check & top-up 211
Preparation for winter 197
Pre-tensioners 55
Pre-tensionsers
  servicing 56
Punctured tires 219

R

Radio aerial 125
Radio/cassette player
  aerial 125
  CD autochanger 125
  remote controls 125
Rain sensor* 91
Rear lights
  bulb replacement 259
Rear luggage access hatch 120
Rear seats 51
Rear window wash/wipe 93
Rear-view mirror 118
Recreational towing 247
Remote controls (radio) 125
Remote handset battery 39
Reverse lights
  bulb replacement 261
Road testing on dynamometers 197
Roof rack 170

S

Safety
  auto hotline 21
Safety in the garage 196
Screenwash 212
Seat belt
  adjustment 55
  care 56
  child seat locking mechanism 58
  cleaning 225
  operation 54
  pre-tensioners 55
  safety 53
  testing 56
Seat belt pretensionsers
  servicing 56
Seat heaters
  front 102, 107
  rear 107
Seats
  child seats 57, 67
  electric backrest adjustment 44
  electric cushion angle adjustment 45
  electric forward/rearward adjustment 44
  electric height adjustment 45
  electric lumbar support adjustment 46
  electric shoulder support adjustment 46
  front (power operated) 43
  rear 51
  seat memory facility 49
Selector lever 144
Self-levelling suspension
  operation 162
Service portfolio book 22, 195
Servo assistance (brakes) 154
Side airbags 66
Side marker lights - front
  bulb replacement 262
Side marker lights - rear
  bulb replacement 260

Index

Sidelights
  bulb replacement 258
  operation 87
Single point entry 35
Snow chains 222
Spare wheel (removing) 236
Spark plugs remove and refit 205
Speedometer 73
Spoiler
  removal (front) 179
Sport mode 146
Stability control 158
Starter switch 131
Starting 132
  automatic models 148
  catalyst (precautions) 136
  emergency 241
  warming-up the engine 133, 189
Steam cleaning (engine) 223
Steering column
  lock 131
Steering data 275
Steering wheel
  adjustment 70
  heater 108
Steering wheel position memory* 70
Stowage box 121
Sun visor 118
Sunroof
  electric operation 97
  roller blind 98
Superlocking 34
System check control 74

T

Tachometer 73
Tail lights
  bulb replacement 259
  operation 87
Tailgate
  emergency manual operation 40, 233
  opening 40
Tailgate light
  bulb replacement 266
Technical data 271
Temperature control 103
Temperature gauge 74
Tether straps 59
Tilt sensor 34
Tire
  pressures 276
  punctures 219
  replacement 220
  specification 276
Tires
  dirctional 240
  directional 221
  pressures 217
  wear indicators 219
Tool kit 234
Tow bars 167
Towing 166
Towing eyes 246
Towing for recovery 246
Towing the vehicle 246
Towing weights 280
Traction control 159
Trailer hitch* 167
Transfer gearbox 150
Transmission
  automatic 144
  sport mode 146
Transmitter - HomeLink® 126
Transporter or trailer lashing 248
Transporting your vehicle 248
Trinket tray 121
Trip computer 75
Trip recorder 74
Trip recorder reset button 74

U

Underbody maintenance 223

V

Vanity mirror (illumination) 118
Vanity mirror light
  bulb replacement 267
Vehicle height 133
Vehicle identification number 227
Vehicle recovery 246
Vehicle weights 279
Ventilation 99, 105
  independently controlled 106

W

Wading 185
Warming-up (the engine) 133, 189
Warning labels 22

Warning lights
airbag SRS 67, 84
anti-lock braking (ABS) 84
battery charging 82
brake system 83
check engine 83
cruise control active 84
direction indicators 85
dynamic stability control (DSC) 84
front fog lights 82
handbrake system 83
headlight high beam 85
hill descent control 'information' 84
low oil pressure 82
rear fog guard lights 82
seat belt 84
Warnings (in handbook) 22
Warranty information 22
Washer fluid 212
Washer jets 213
Washers (windshield)
operation 92
Washing (the bodywork) 223
Weights (vehicle) 279
Wheel
size & type 276
spare (removal) 236
Wheel changing
changing the wheel 235
jacking the vehicle 239
spare wheel 236
tool kit 234
Wheel chocks 235
Windows 95
Windscreen wipers
operation 90
Windshield washers
fluid top-up 212
operation 92
Windshield wipers
blade replacement 214
intermittent wipe 91
Rain sensor variable delay* 91
roadspeed sensor 91
variable delay 91
Wiper blade replacement
front 214
headlight 214
rear 214

X

Xenon light units 255